FMWRD650D28
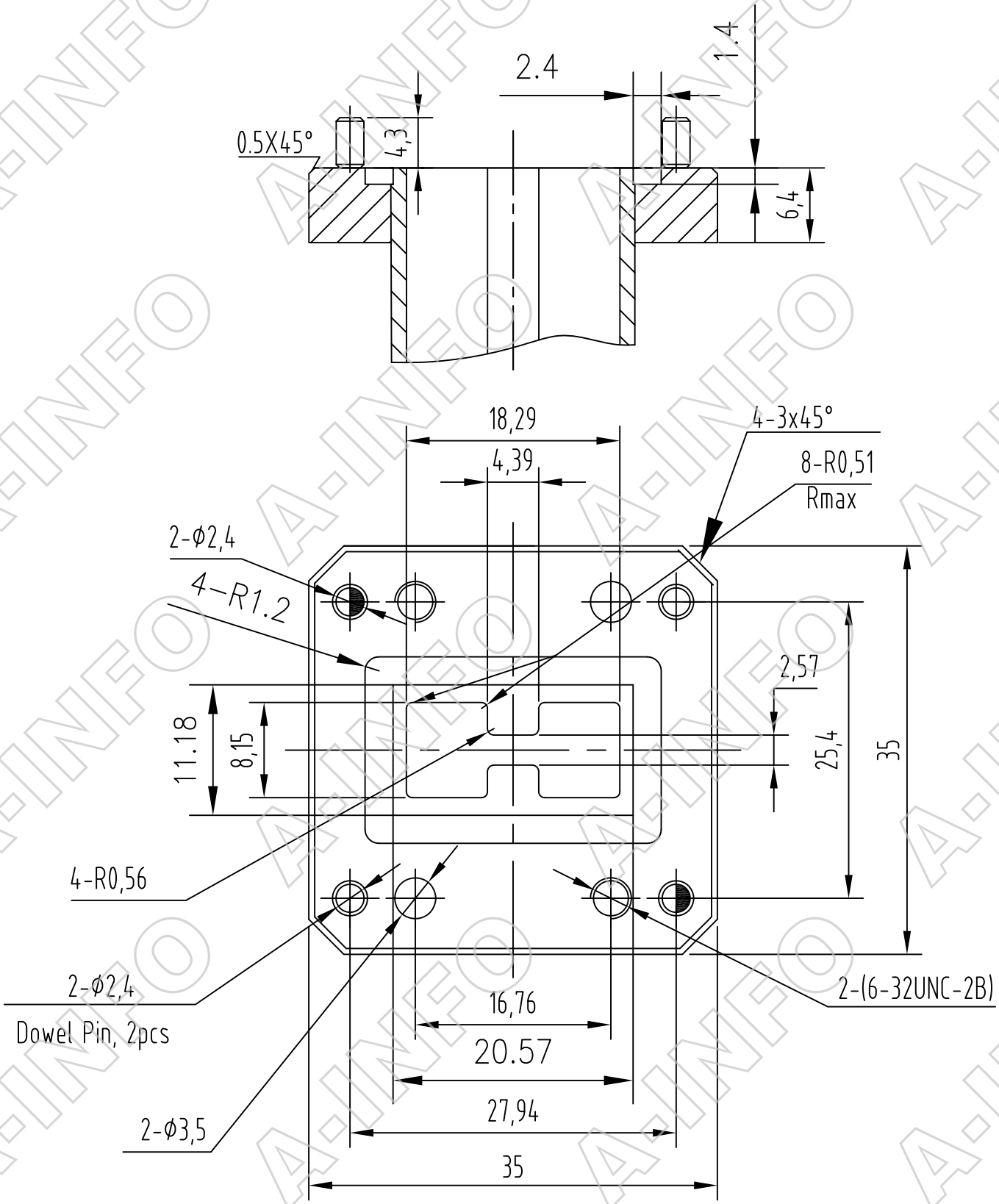
(With two through mounting holes and two screws holes)