Outline Drawing (Size: mm)

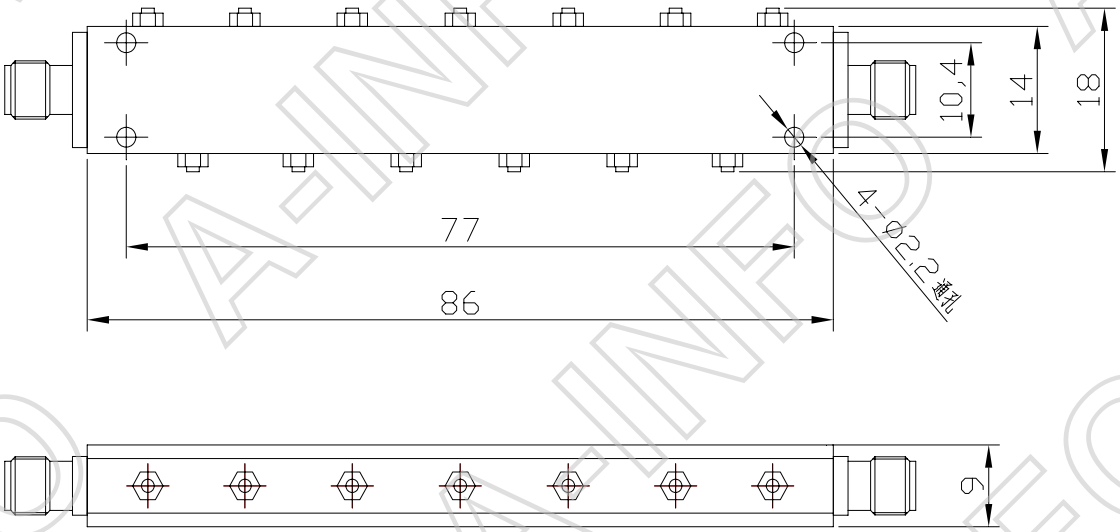

Technical Specification

Item	Technical Specification
Center Frequency(GHz)	11
1dB Bandwidth(GHz)	10~12
Rejection(dB @MHz)	60@9500
	60@12500
I.L. at Center Frequency(dB)	1.0
VSWR	1.8
Connector	SMA-Female

Test Results

Insertion Loss(dB)			Stop Band(dB)		VSWR
11.0GHz	10.0GHz	12.0GHz	9.5GHz	12.5GHz	
0.48	1.17	1.15	61.2	63.7	1.8

Tel: +86-28-8519-2786 or +86-28-8519-3047 Fax: +86-28-8519-3068 Website: www.ainfoinc.com
Data subject to change without notice. For current data sheets, please contact: Sales@ainfoinc.com