Technical Specification

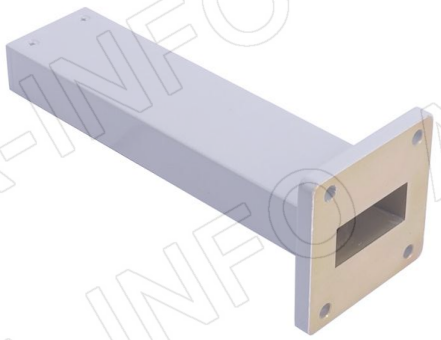

EIA WR	WR112
Frequency Range(GHz)	7.05 – 10.0
VSWR	1.03:1 Max.
Average Power(W CW)	4
Peak Power(KW)	4
Flange	FBP84(UBR84)
Material	Al
Size(mm)	127 x 47.8 x 47.8
Net Weight(Kg)	0.15 Around

Outline Drawing (Size: mm)

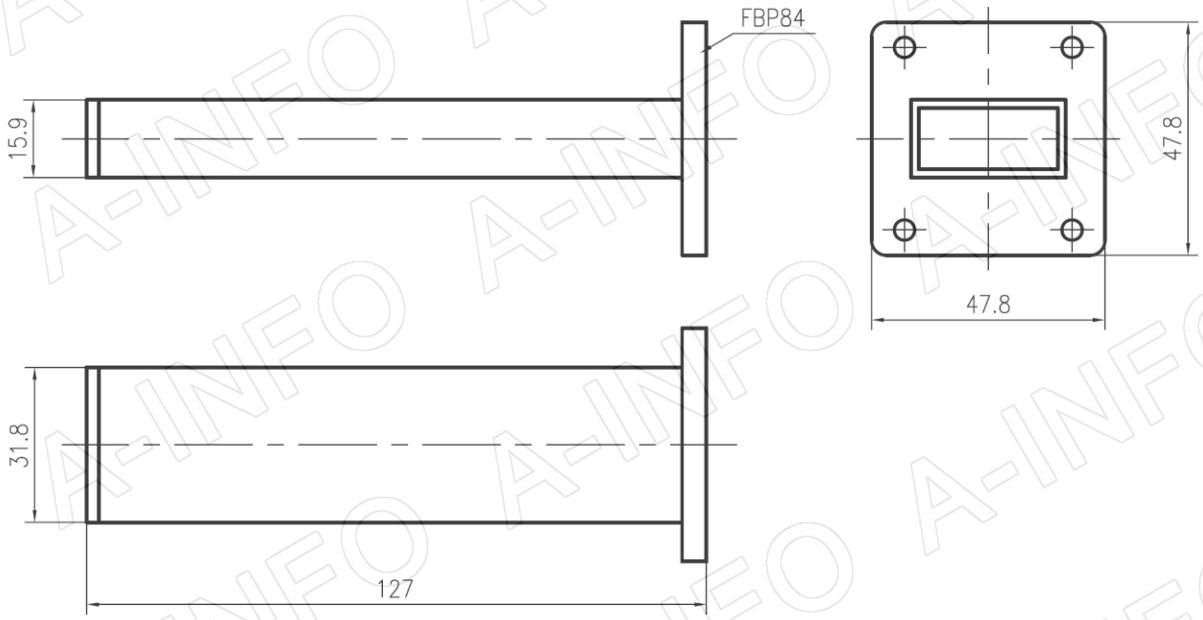

AINFO Inc.
China(Beijing): Tel: (+86) 10-6266-7326, (+86) 10-6266-7327 Fax: (+86) 10-6266-7379
China(Chengdu): Tel: (+86) 28-8519-2786, (+86) 28-8519-3044 Fax: (+86) 28-8519-3068
USA : Tel: (+1) 949-639-9688, (+1) 949-639-9608 Fax: (+1) 949-639-9670
Website: www.ainfoinc.com
Email: sales@ainfoinc.com

Data subject to change without notice. For current data sheets, please contact: Sales@ainfoinc.com

Flange Drawing (Size: mm)

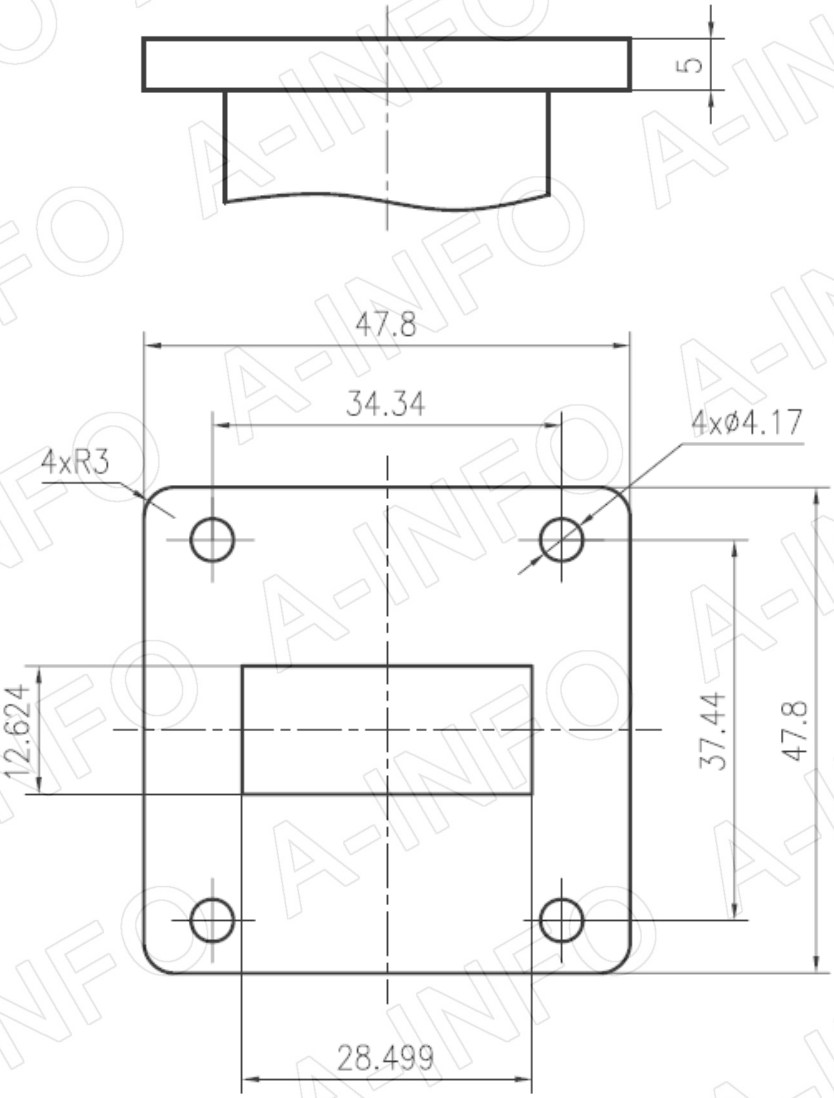

FBP84

AINFO Inc.
China(Beijing): Tel: (+86) 10-6266-7326, (+86) 10-6266-7327 Fax: (+86) 10-6266-7379
China(Chengdu): Tel: (+86) 28-8519-2786, (+86) 28-8519-3044 Fax: (+86) 28-8519-3068 Website: www.ainfoinc.com
USA : Tel: (+1) 949-639-9688, (+1) 949-639-9608 Fax: (+1) 949-639-9670 Email: sales@ainfoinc.com

Data subject to change without notice. For current data sheets, please contact: Sales@ainfoinc.com

Test Results

VSWR

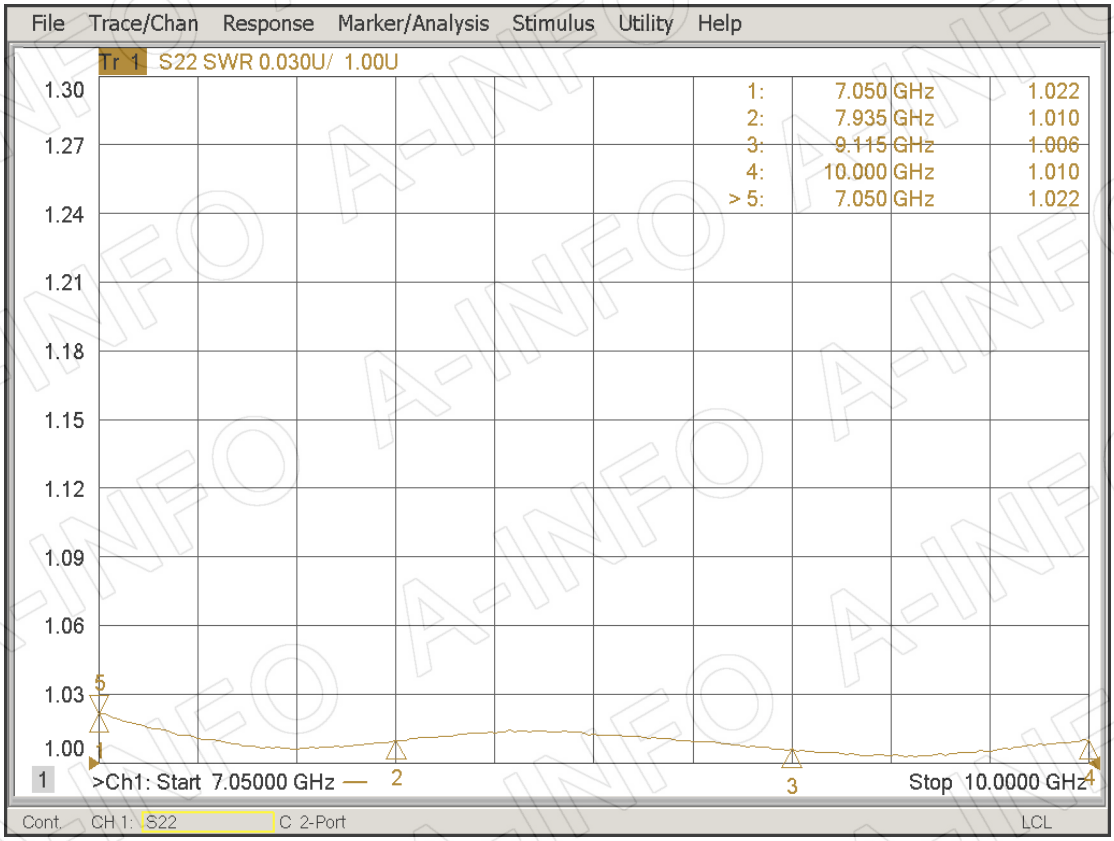

AINFO Inc.
China(Beijing): Tel: (+86) 10-6266-7326, (+86) 10-6266-7327 Fax: (+86) 10-6266-7379
China(Chengdu): Tel: (+86) 28-8519-2786, (+86) 28-8519-3044 Fax: (+86) 28-8519-3068
USA : Tel: (+1) 949-639-9688, (+1) 949-639-9608 Fax: (+1) 949-639-9670
Website: www.ainfoinc.com
Email: sales@ainfoinc.com

Data subject to change without notice. For current data sheets, please contact: Sales@ainfoinc.com