Technical Specification

EIA WR	WR51
Frequency Range(GHz)	15.0 - 22.0
Coupling(dB)	40
Coupling Accuracy(dB)	±0.9 Max.
Frequency Sensitivity(dB)	±0.7 Max.
Directivity(dB)	30 Min.
Insertion Loss(dB)	0.3 Max. (Not including the theoretical loss 4.34×10^{-4}dB)
Mainline VSWR	1.10:1 Max.
Secondline VSWR	1.25:1 Max.
Flange	FBP180(UBR180)
Coupling Port	SMA-Female/SMA-Male
Material	Al
Size(mm)	292.1 x 30.2 x 40.1
Net Weight(Kg)	0.40 Around

Outline Drawing (Size: mm)

Coupling Port: SMA-Female

For SMA-Male connector Coupling Port outline drawing, please contact A-INFO.

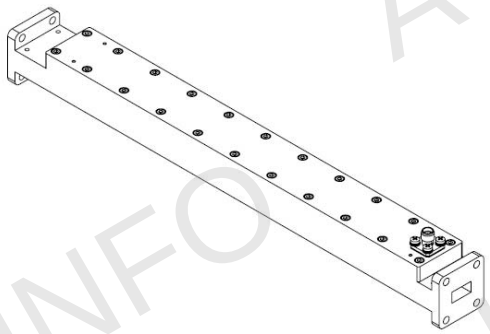

China(Beijing): Tel: (+86) 10-6266-7326, (+86) 10-6266-7327 Fax: (+86) 10-6266-7379
China(Chengdu): Tel: (+86) 28-8519-2786, (+86) 28-8519-3044 Fax: (+86) 28-8519-3068
USA : Tel: (+1) 949-639-9688, (+1) 949-639-9608 Fax: (+1) 949-639-9670
Website: www.ainfoinc.com
Email: sales@ainfoinc.com
Data subject to change without notice. For current data sheets, please contact: Sales@ainfoinc.com

Flange Drawing (Size: mm)

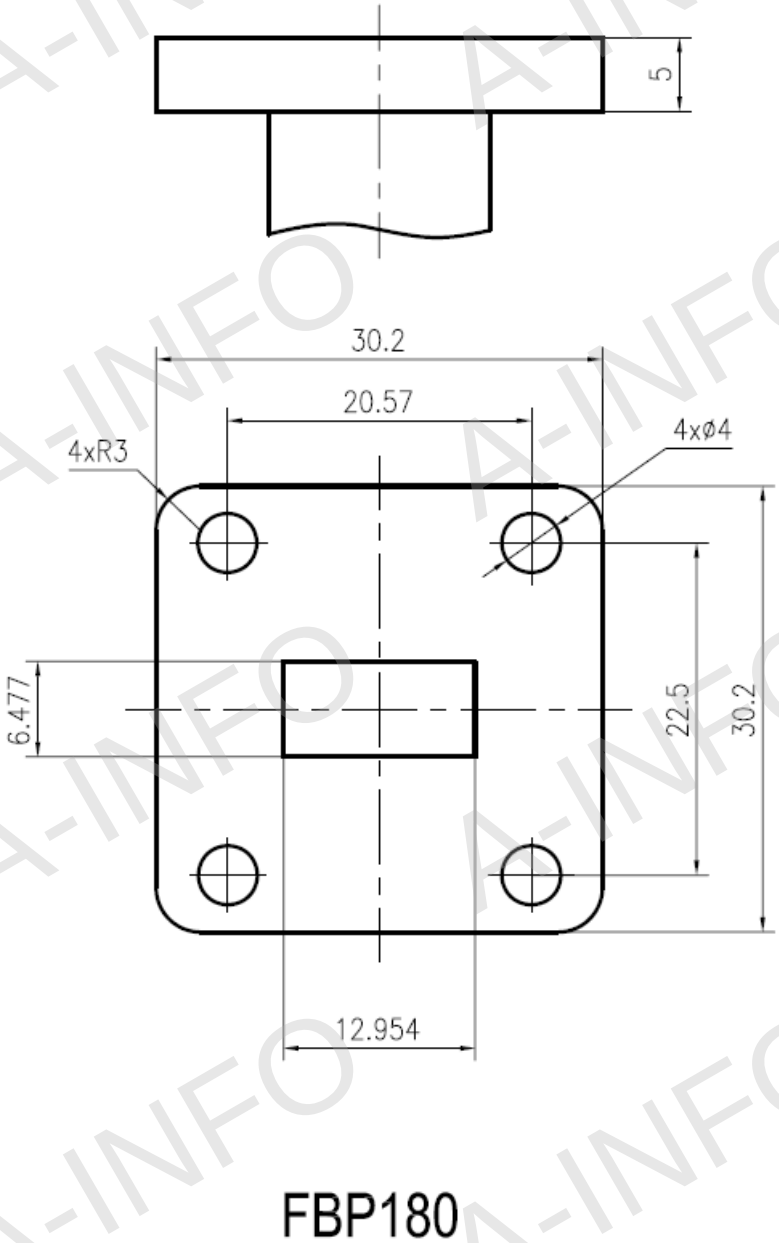

China(Beijing): Tel: (+86) 10-6266-7326, (+86) 10-6266-7327 Fax: (+86) 10-6266-7379
China(Chengdu): Tel: (+86) 28-8519-2786, (+86) 28-8519-3044 Fax: (+86) 28-8519-3068 Website: www.ainfoinc.com
USA : Tel: (+1) 949-639-9688, (+1) 949-639-9608 Fax: (+1) 949-639-9670 Email: sales@ainfoinc.com
Data subject to change without notice. For current data sheets, please contact: Sales@ainfoinc.com

Test Results

Coupling

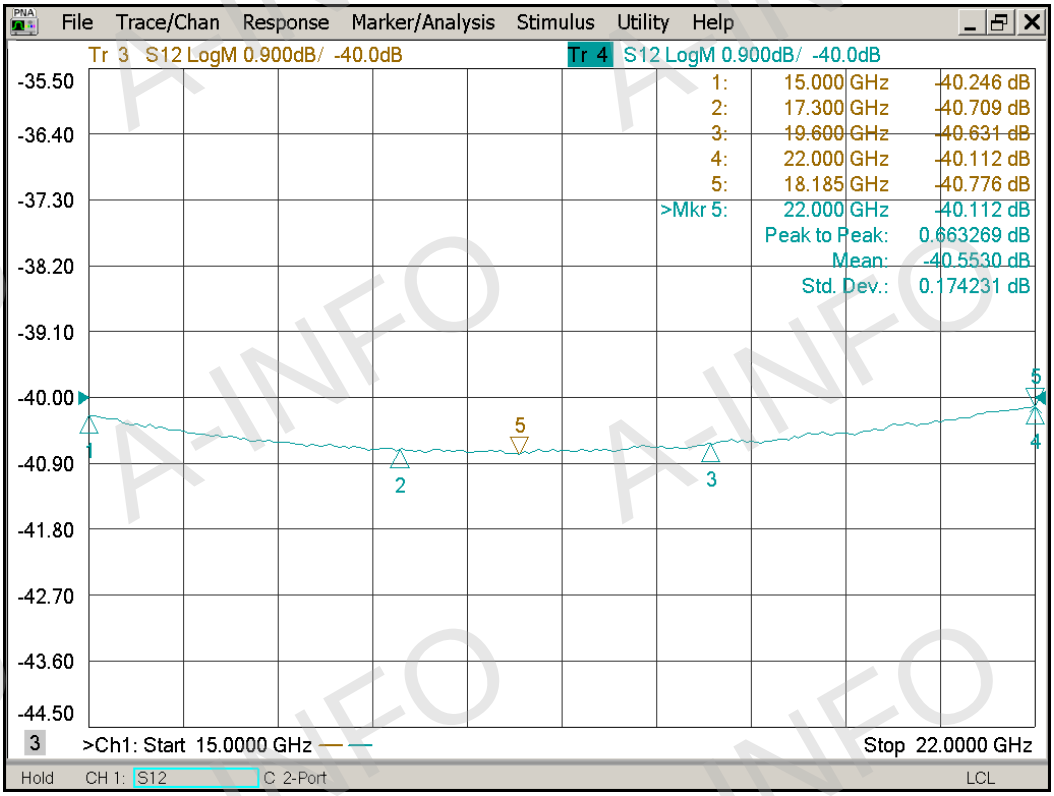

Directivity

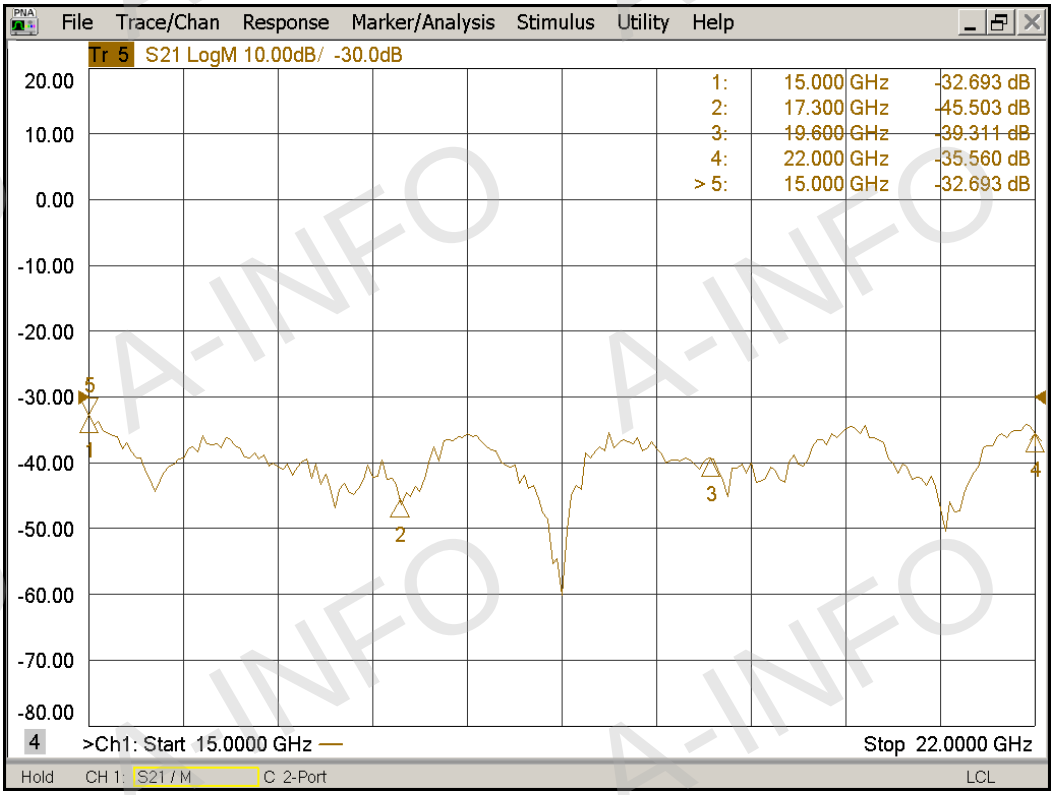

China(Beijing): Tel: (+86) 10-6266-7326, (+86) 10-6266-7327 Fax: (+86) 10-6266-7379
China(Chengdu): Tel: (+86) 28-8519-2786, (+86) 28-8519-3044 Fax: (+86) 28-8519-3068
USA : Tel: (+1) 949-639-9688, (+1) 949-639-9608 Fax: (+1) 949-639-9670
Website: www.ainfoinc.com
Email: sales@ainfoinc.com

Data subject to change without notice. For current data sheets, please contact: Sales@ainfoinc.com

Insertion Loss(Including the theoretical loss 4.34×10^{-4}dB)

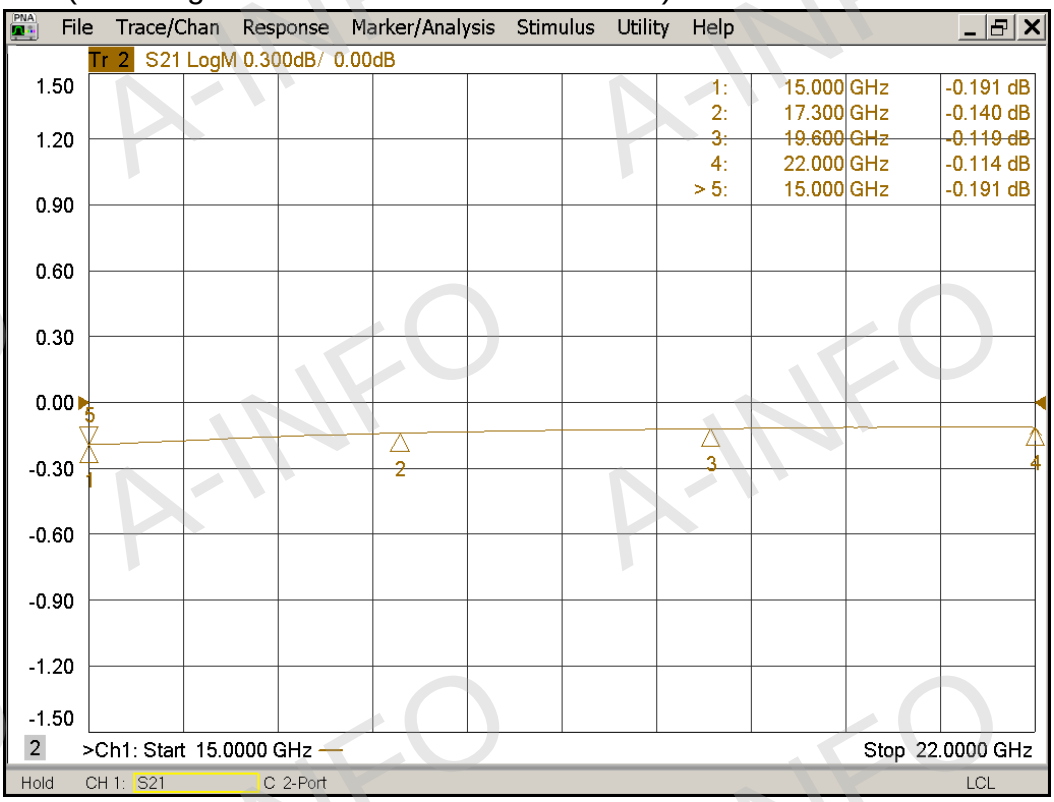

Mainline VSWR

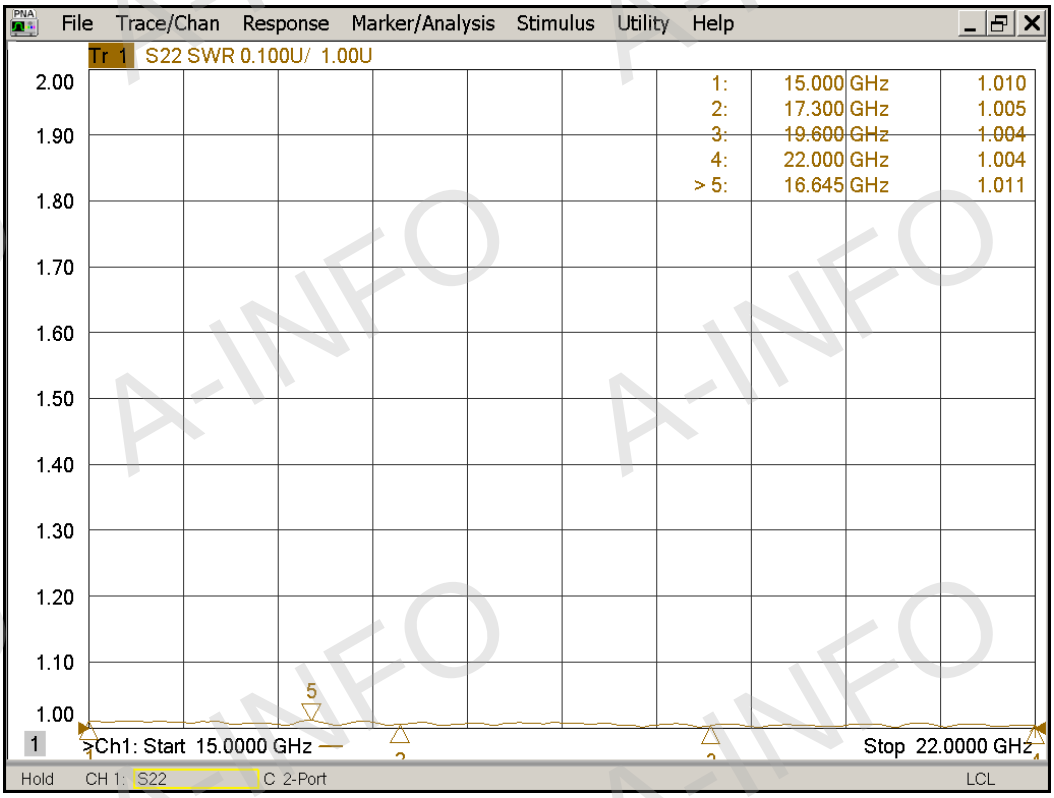

China(Beijing): Tel: (+86) 10-6266-7326, (+86) 10-6266-7327 Fax: (+86) 10-6266-7379
China(Chengdu): Tel: (+86) 28-8519-2786, (+86) 28-8519-3044 Fax: (+86) 28-8519-3068
USA : Tel: (+1) 949-639-9688, (+1) 949-639-9608 Fax: (+1) 949-639-9670
Website: www.ainfoinc.com
Email: sales@ainfoinc.com
Data subject to change without notice. For current data sheets, please contact: Sales@ainfoinc.com

Secondline VSWR

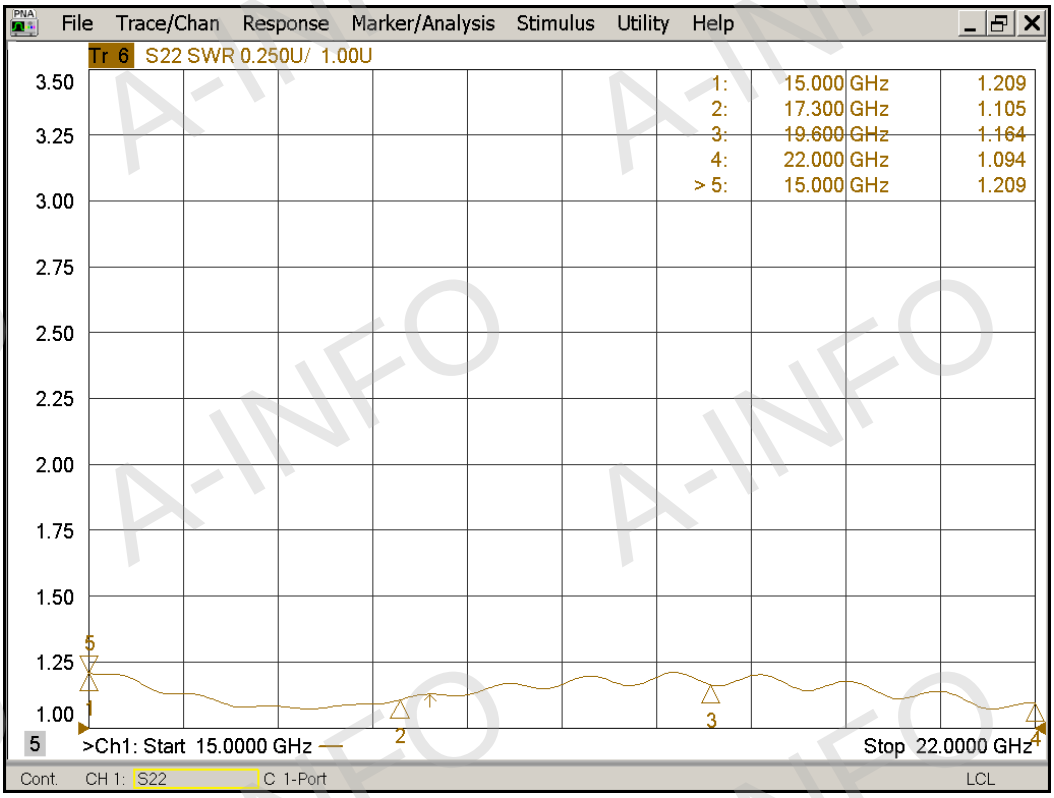

China(Beijing): Tel: (+86) 10-6266-7326, (+86) 10-6266-7327 Fax: (+86) 10-6266-7379
China(Chengdu): Tel: (+86) 28-8519-2786, (+86) 28-8519-3044 Fax: (+86) 28-8519-3068
USA : Tel: (+1) 949-639-9688, (+1) 949-639-9608 Fax: (+1) 949-639-9670
Website: www.ainfoinc.com
Email: sales@ainfoinc.com

Data subject to change without notice. For current data sheets, please contact: Sales@ainfoinc.com