Technical Specification

EIA WRD to WR	WRD650 to WR34
Frequency Range(GHz)	WRD650: 6.5 - 18.0
	WR34: 22.0 - 33.0
Length(mm/inch)	152.4/6.0
Insertion Loss(dB)	0.25 Max.
VSWR	1.15:1 Max.
WRD650 Flange	FPWRD650D28
WR34 Flange	FBP260(UBR260)
Material	Al
Size(mm)	152.4 x 35 x 35
Net Weight(Kg)	0.15 Around

Outline Drawing (Size: mm)

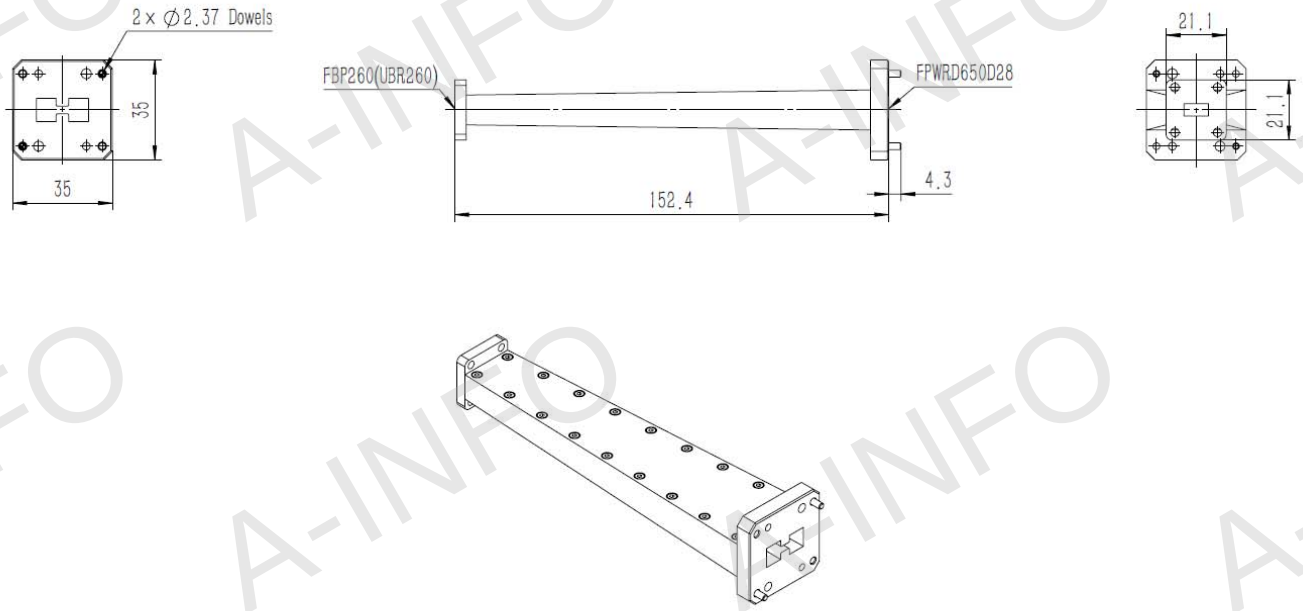

China(Beijing): Tel: (+86) 10-6266-7326, (+86) 10-6266-7327 Fax: (+86) 10-6266-7379
China(Chengdu): Tel: (+86) 28-8519-2786, (+86) 28-8519-3044 Fax: (+86) 28-8519-3068
USA : Tel: (+1) 949-639-9688, (+1) 949-639-9608 Fax: (+1) 949-639-9670
Website: www.ainfoinc.com
Email: sales@ainfoinc.com

Data subject to change without notice. For current data sheets, please contact: Sales@ainfoinc.com

Flange Outline Drawing (Size: mm)

FPWRD650D28

(With two through mounting holes
and two screws holes)

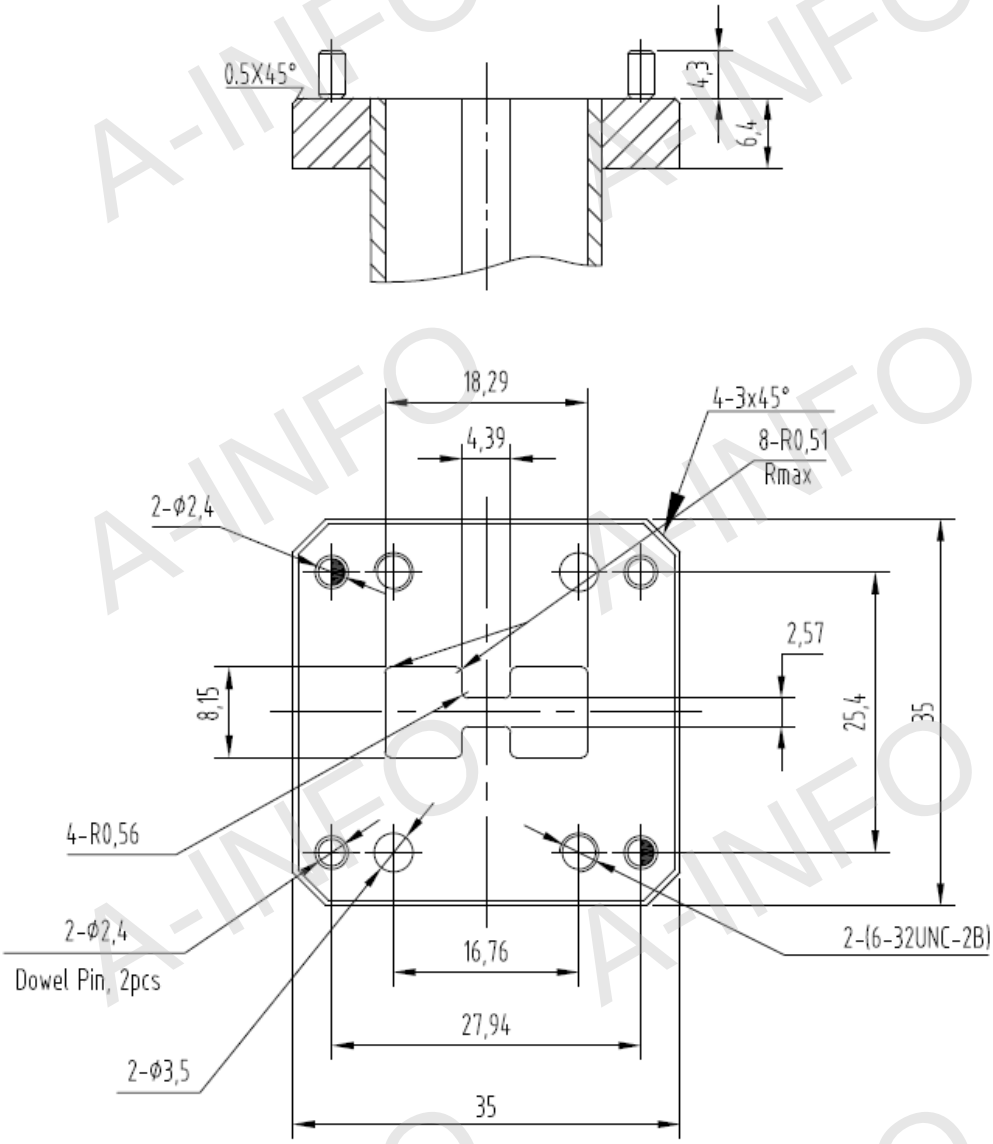

China(Beijing): Tel: (+86) 10-6266-7326, (+86) 10-6266-7327 Fax: (+86) 10-6266-7379
China(Chengdu): Tel: (+86) 28-8519-2786, (+86) 28-8519-3044 Fax: (+86) 28-8519-3068
USA : Tel: (+1) 949-639-9688, (+1) 949-639-9608 Fax: (+1) 949-639-9670
Website: www.ainfoinc.com
Email: sales@ainfoinc.com

Data subject to change without notice. For current data sheets, please contact: Sales@ainfoinc.com

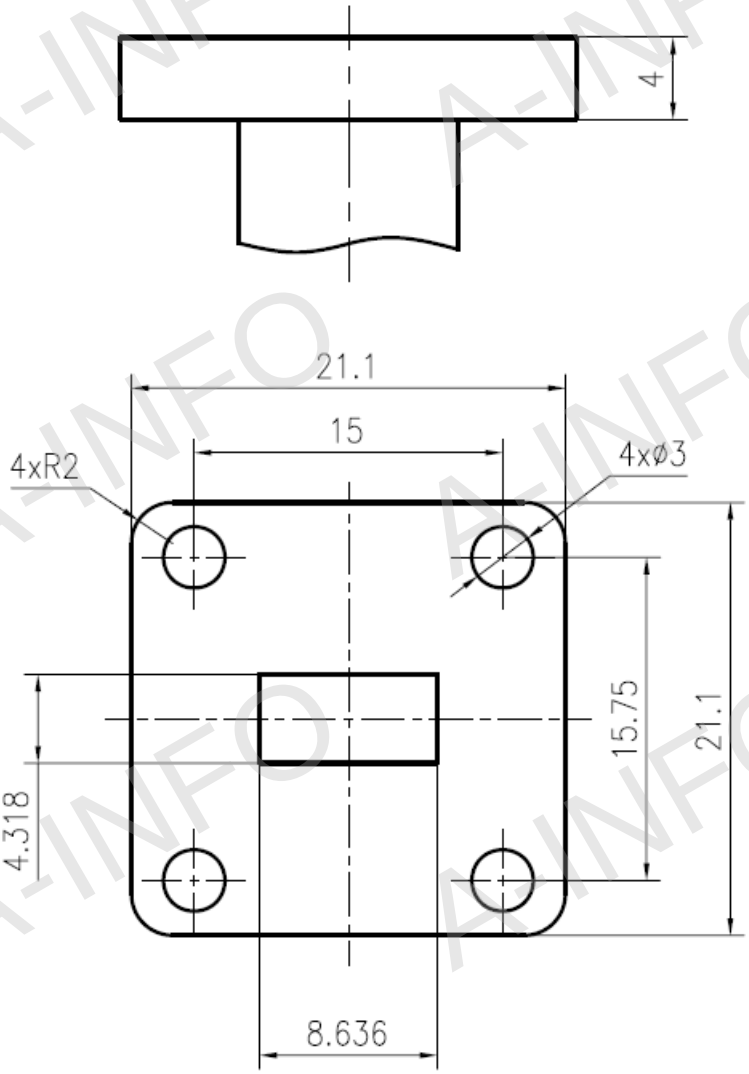

FBP260

China(Beijing): Tel: (+86) 10-6266-7326, (+86) 10-6266-7327 Fax: (+86) 10-6266-7379
China(Chengdu): Tel: (+86) 28-8519-2786, (+86) 28-8519-3044 Fax: (+86) 28-8519-3068
USA : Tel: (+1) 949-639-9688, (+1) 949-639-9608 Fax: (+1) 949-639-9670
Website: www.ainfoinc.com
Email: sales@ainfoinc.com

Data subject to change without notice. For current data sheets, please contact: Sales@ainfoinc.com

Test Result

Insertion Loss (Test with two transitions back to back)

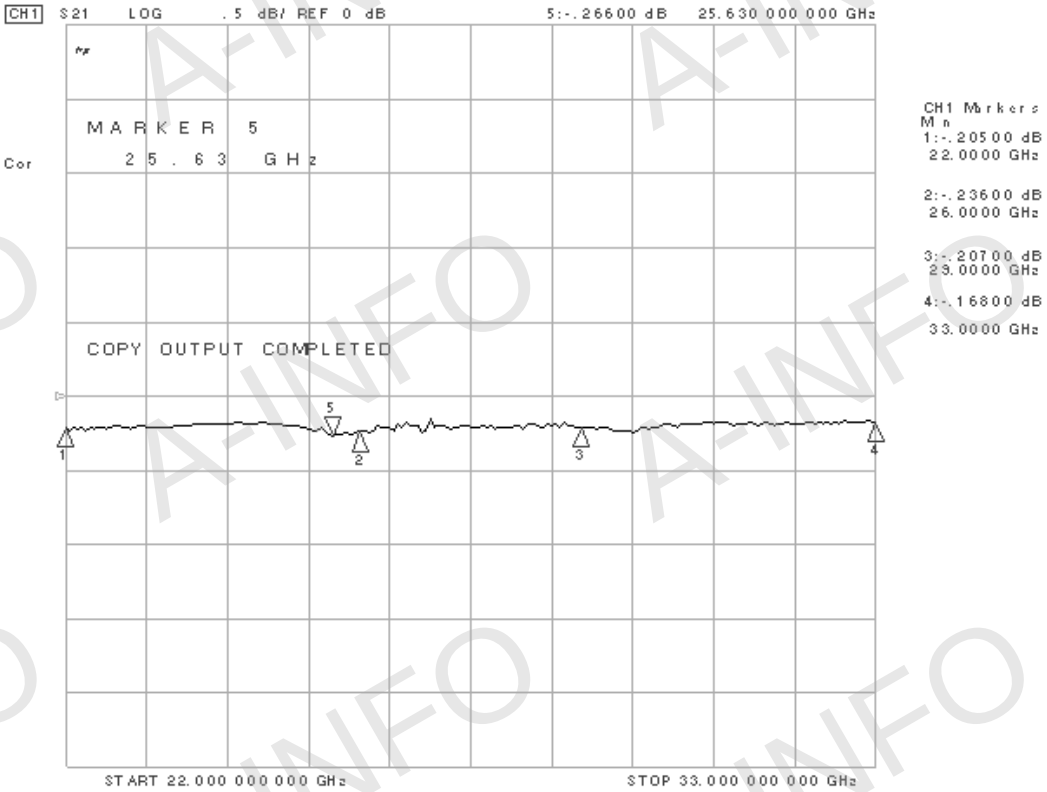

VSWR

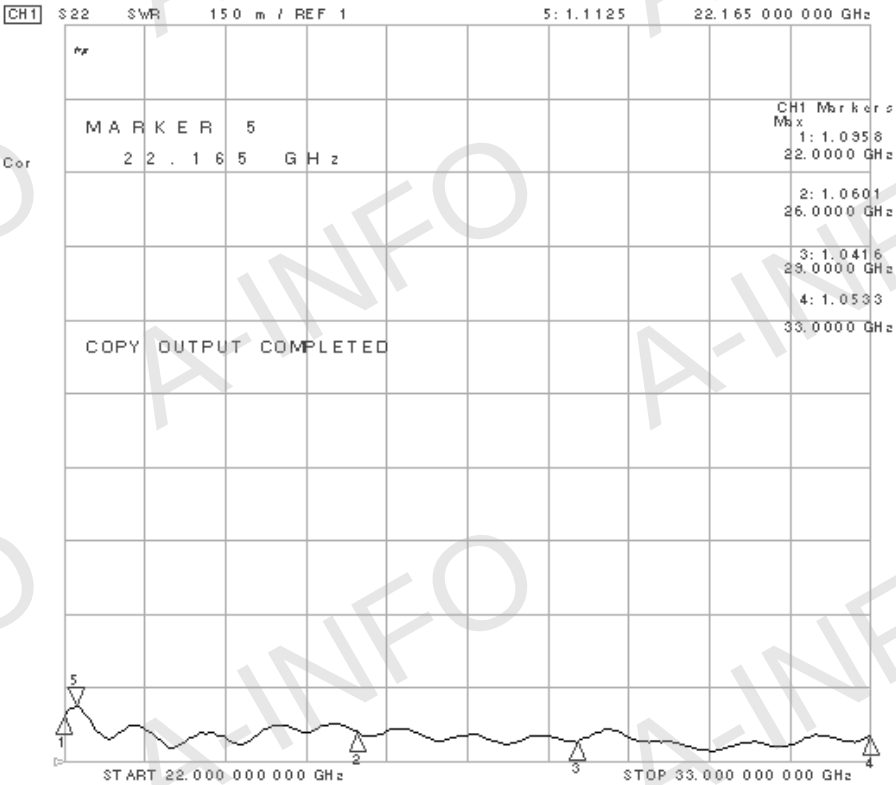

China(Beijing): Tel: (+86) 10-6266-7326, (+86) 10-6266-7327 Fax: (+86) 10-6266-7379
China(Chengdu): Tel: (+86) 28-8519-2786, (+86) 28-8519-3044 Fax: (+86) 28-8519-3068
USA : Tel: (+1) 949-639-9688, (+1) 949-639-9608 Fax: (+1) 949-639-9670
Website: www.ainfoinc.com
Email: sales@ainfoinc.com

Data subject to change without notice. For current data sheets, please contact: Sales@ainfoinc.com