Technical Specification

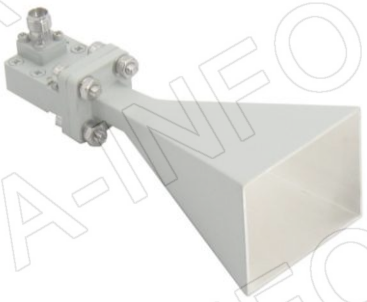

Frequency Range(GHz)	26.5 - 40.0	
Waveguide	WR28	
Gain(dBi)	20 Typ.	
Polarization	Linear	
3dB Beamwidth(deg)	E Plane:	16 Typ.
	H Plane:	18 Typ.
Cross Pol. Isolation(dB)	40 Typ.	
VSWR	A Type:	1.15:1 Typ.
	C Type:	1.25:1 Typ.
Output	A Type:	FBP320(UBR320)
	C Type:	2.92mm-Female or 2.4mm-Female
Material	Cu	
Size(mm)	A Type:	31.9 x 40.4 x 70
	C Type:	32.1 x 40.4 x 94
Net Weight(Kg)	A Type:	0.05 Around
	C Type:	0.10 Around

Outline Drawing (Size: mm)

FBP320 Output (P/N: LB-28-20-A)

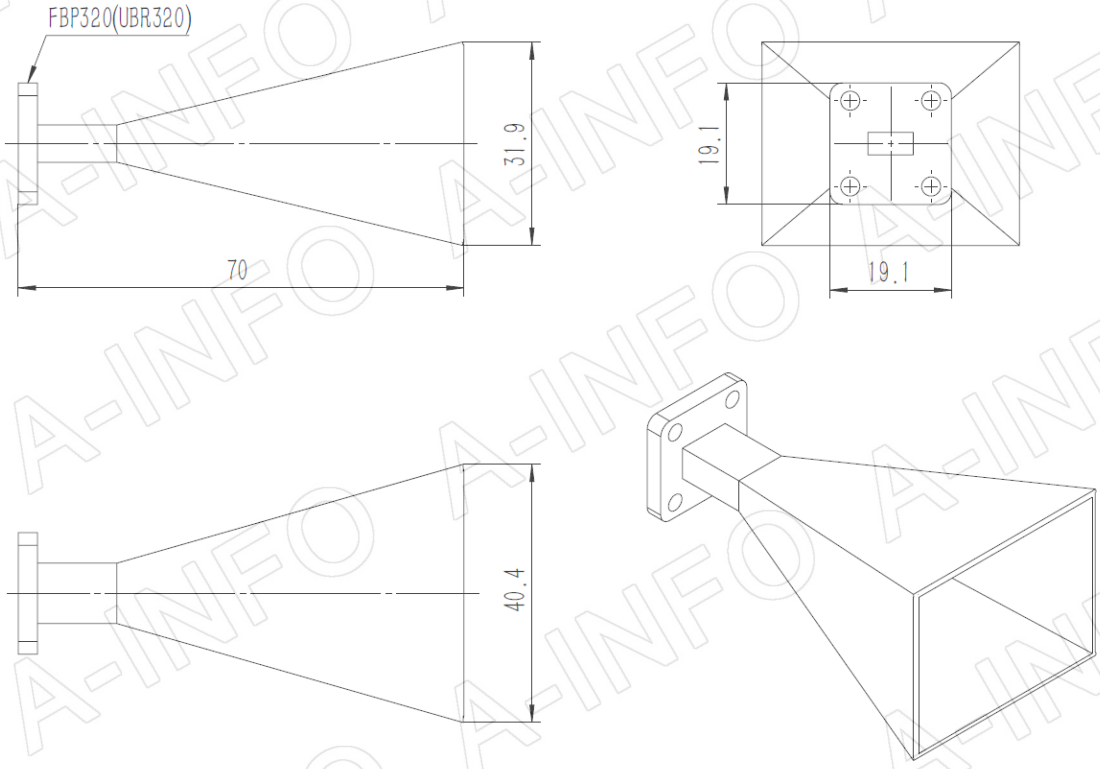

China(Beijing): Tel: (+86) 10-6266-7326, (+86) 10-6266-7327 Fax: (+86) 10-6266-7379
China(Chengdu): Tel: (+86) 28-8519-2786, (+86) 28-8519-3044 Fax: (+86) 28-8519-3068 Website: www.ainfoinc.com
USA : Tel: (+1) 949-639-9688, (+1) 949-639-9608 Fax: (+1) 949-639-9670 Email: sales@ainfoinc.com
Data subject to change without notice. For current data sheets, please contact: Sales@ainfoinc.com

2.92mm-Female Output (P/N: LB-28-20-C-KF)

For 2.4mm-Female output outline drawing, please contact A-INFO.

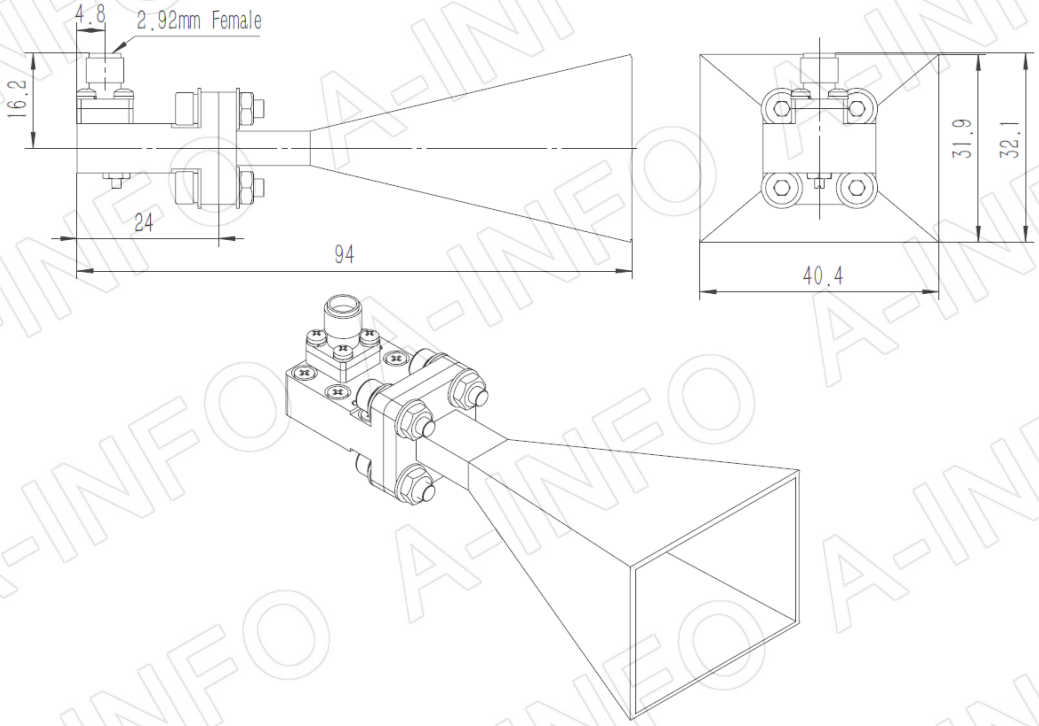

2.92mm-Female Output with Round Mounting Bracket (Option, P/N: LB-28-10-C-MB)

For 2.4mm-Female output outline drawing, please contact A-INFO.

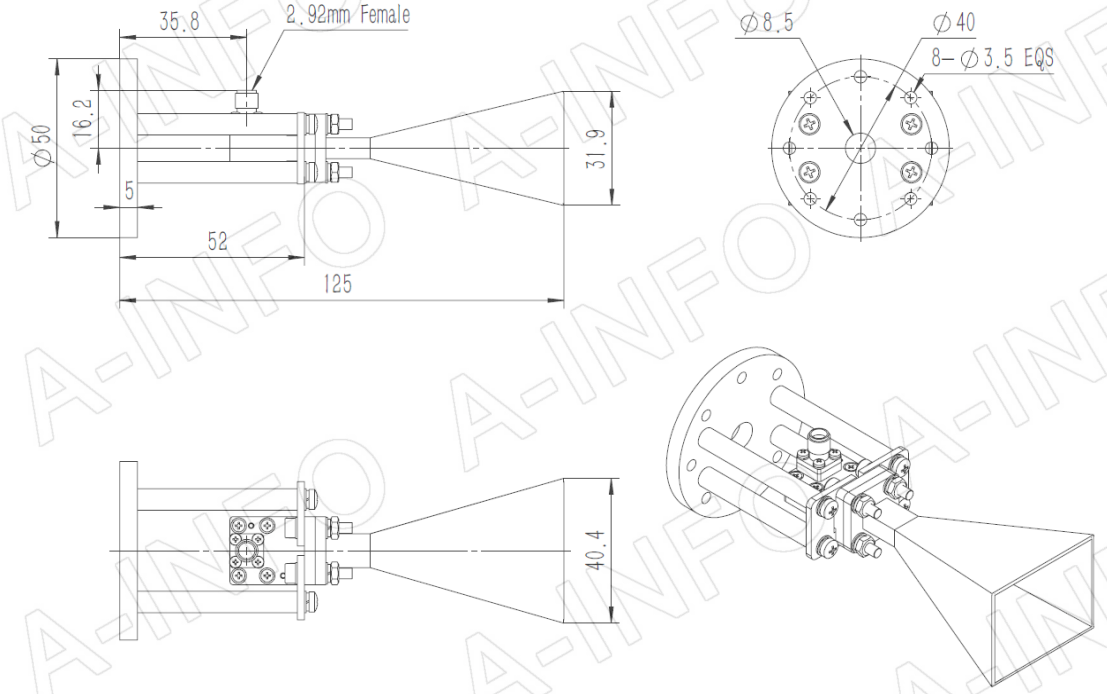

China(Beijing): Tel: (+86) 10-6266-7326, (+86) 10-6266-7327 Fax: (+86) 10-6266-7379
China(Chengdu): Tel: (+86) 28-8519-2786, (+86) 28-8519-3044 Fax: (+86) 28-8519-3068
USA : Tel: (+1) 949-639-9688, (+1) 949-639-9608 Fax: (+1) 949-639-9670
Website: www.ainfoinc.com
Email: sales@ainfoinc.com
Data subject to change without notice. For current data sheets, please contact: Sales@ainfoinc.com

2.92mm-Female Output with L Type Mounting Bracket (Option, P/N: LB-28-10-C-MBL)

For 2.4mm-Female output outline drawing, please contact A-INFO.

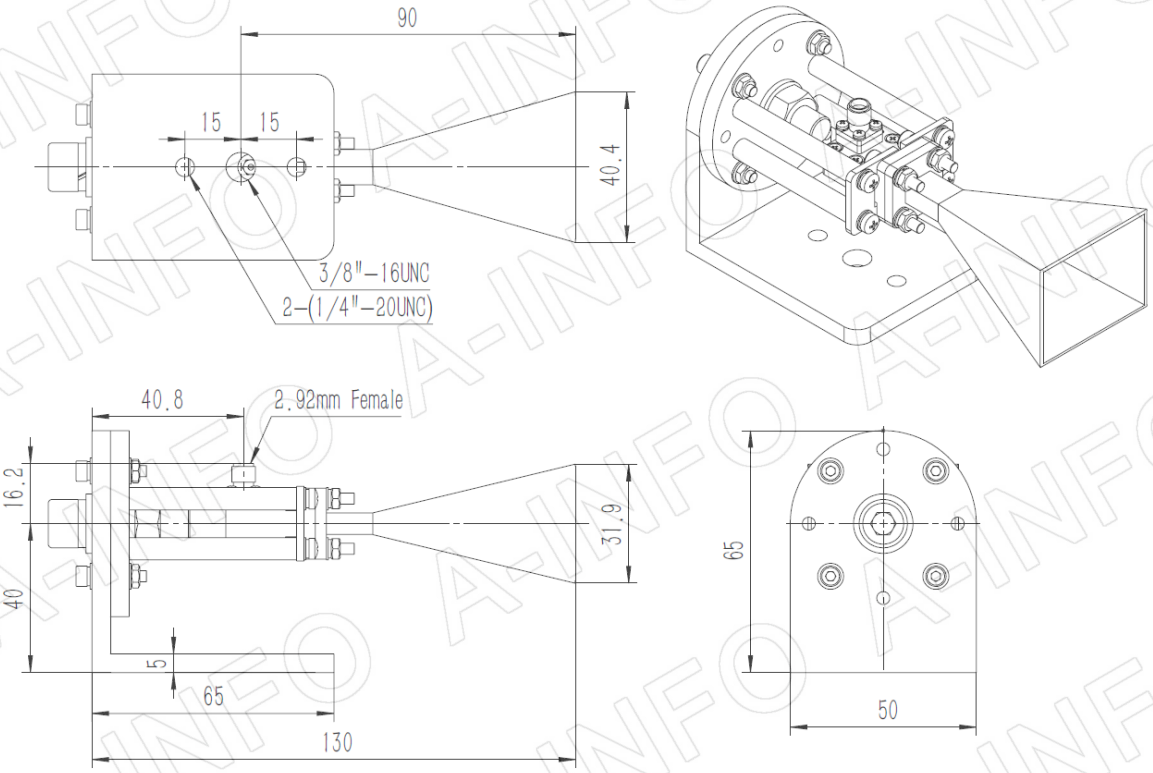

FBP320 Output with Radome (Option, P/N: LB-28-20-ASPO, Outdoor Application)

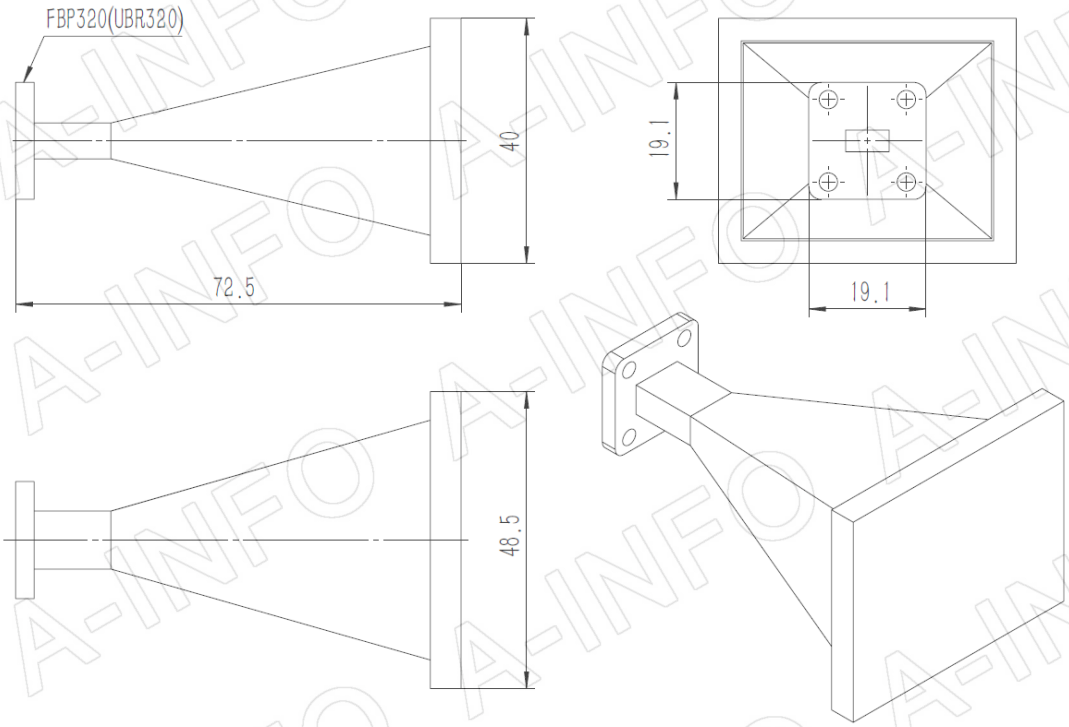

China(Beijing): Tel: (+86) 10-6266-7326, (+86) 10-6266-7327 Fax: (+86) 10-6266-7379
China(Chengdu): Tel: (+86) 28-8519-2786, (+86) 28-8519-3044 Fax: (+86) 28-8519-3068 Website: www.ainfoinc.com
USA : Tel: (+1) 949-639-9688, (+1) 949-639-9608 Fax: (+1) 949-639-9670 Email: sales@ainfoinc.com
Data subject to change without notice. For current data sheets, please contact: Sales@ainfoinc.com

2.92mm-Female Output with Radome (Option, P/N: LB-28-20-C-KFSPO, Outdoor Application)

For 2.4mm-Female output outline drawing, please contact A-INFO.

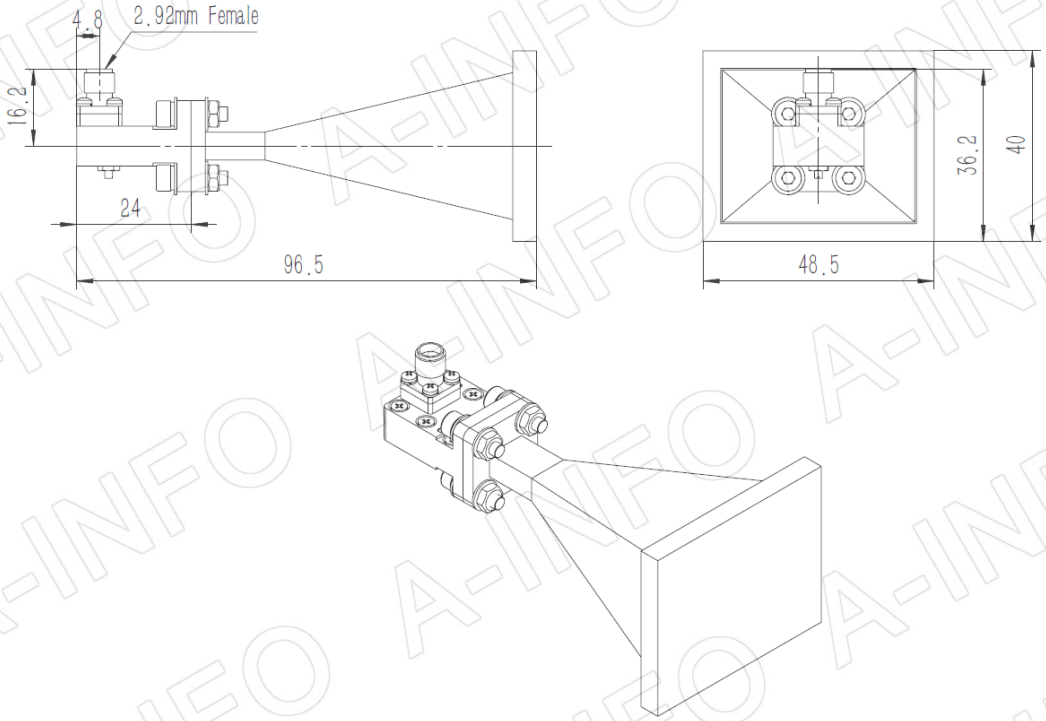

2.92mm-Female Output with Round Mounting Bracket & Radome (Option, P/N: LB-28-10-C-MB & LB-28-20-C-KFSPO, Outdoor Application)

For 2.4mm-Female output outline drawing, please contact A-INFO.

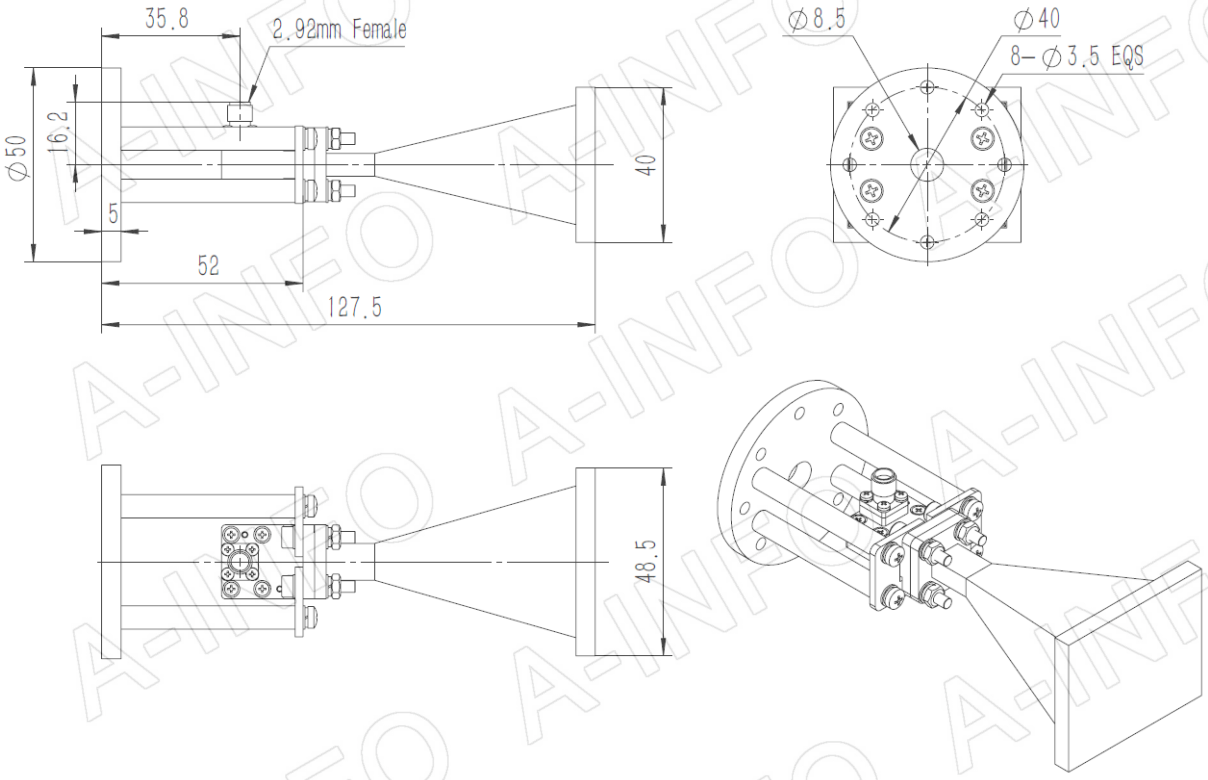

China(Beijing): Tel: (+86) 10-6266-7326, (+86) 10-6266-7327 Fax: (+86) 10-6266-7379
China(Chengdu): Tel: (+86) 28-8519-2786, (+86) 28-8519-3044 Fax: (+86) 28-8519-3068
USA : Tel: (+1) 949-639-9688, (+1) 949-639-9608 Fax: (+1) 949-639-9670
Website: www.ainfoinc.com
Email: sales@ainfoinc.com
Data subject to change without notice. For current data sheets, please contact: Sales@ainfoinc.com

2.92mm-Female Output with L Type Mounting Bracket & Radome (Option, P/N: LB-28-10-C-MBL & LB-28-20-C-KFSPO, Outdoor Application)

For 2.4mm-Female output outline drawing, please contact A-INFO.

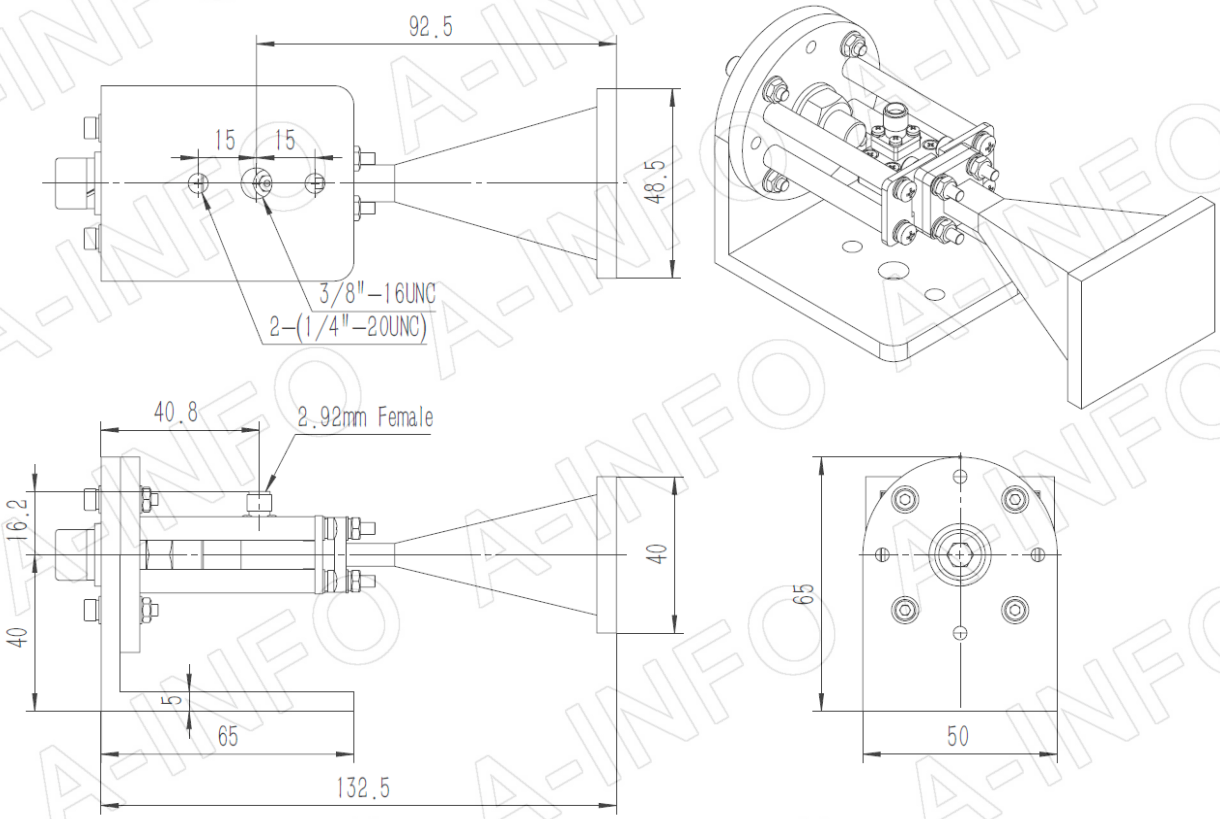

China(Beijing): Tel: (+86) 10-6266-7326, (+86) 10-6266-7327 Fax: (+86) 10-6266-7379
China(Chengdu): Tel: (+86) 28-8519-2786, (+86) 28-8519-3044 Fax: (+86) 28-8519-3068 Website: www.ainfoinc.com
USA : Tel: (+1) 949-639-9688, (+1) 949-639-9608 Fax: (+1) 949-639-9670 Email: sales@ainfoinc.com
Data subject to change without notice. For current data sheets, please contact: Sales@ainfoinc.com

Flange Drawing (Size: mm)

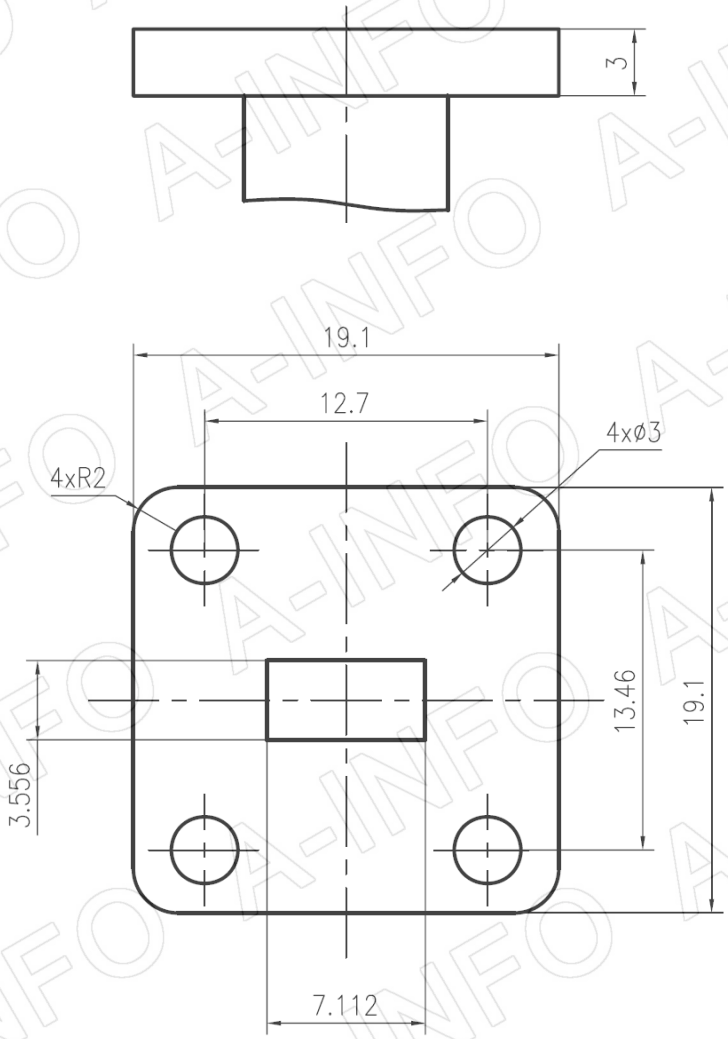

FBP320

China(Beijing): Tel: (+86) 10-6266-7326, (+86) 10-6266-7327 Fax: (+86) 10-6266-7379
China(Chengdu): Tel: (+86) 28-8519-2786, (+86) 28-8519-3044 Fax: (+86) 28-8519-3068 Website: www.ainfoinc.com
USA : Tel: (+1) 949-639-9688, (+1) 949-639-9608 Fax: (+1) 949-639-9670 Email: sales@ainfoinc.com
Data subject to change without notice. For current data sheets, please contact: Sales@ainfoinc.com

Test Results

1. Gain & Antenna Factor

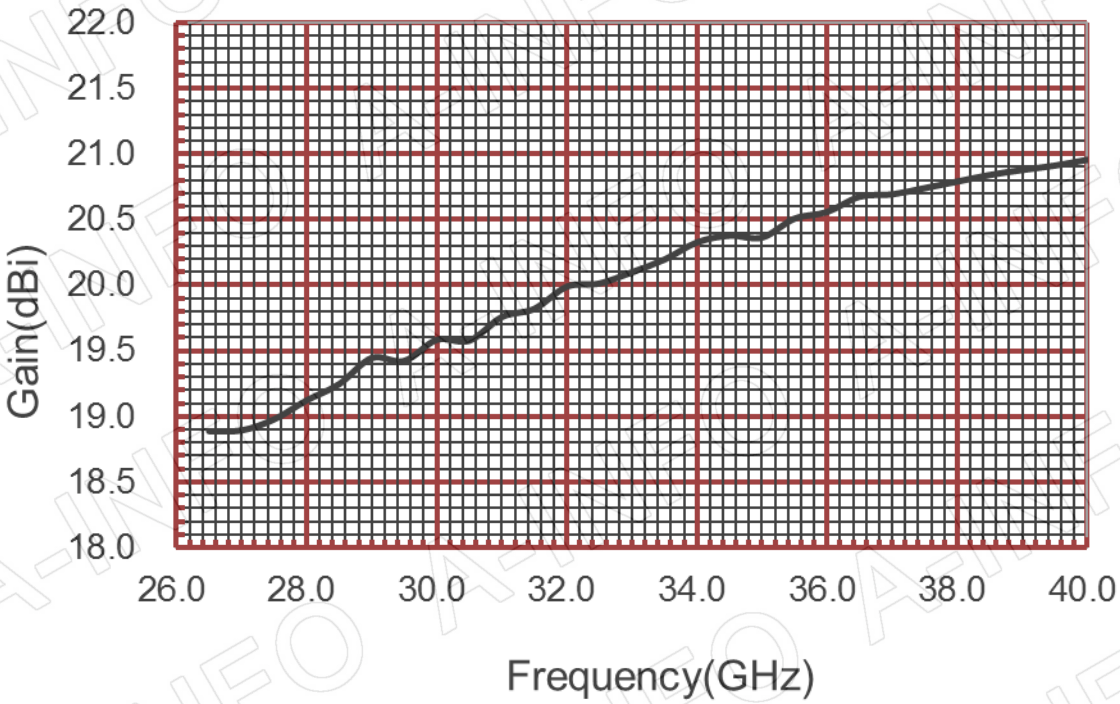

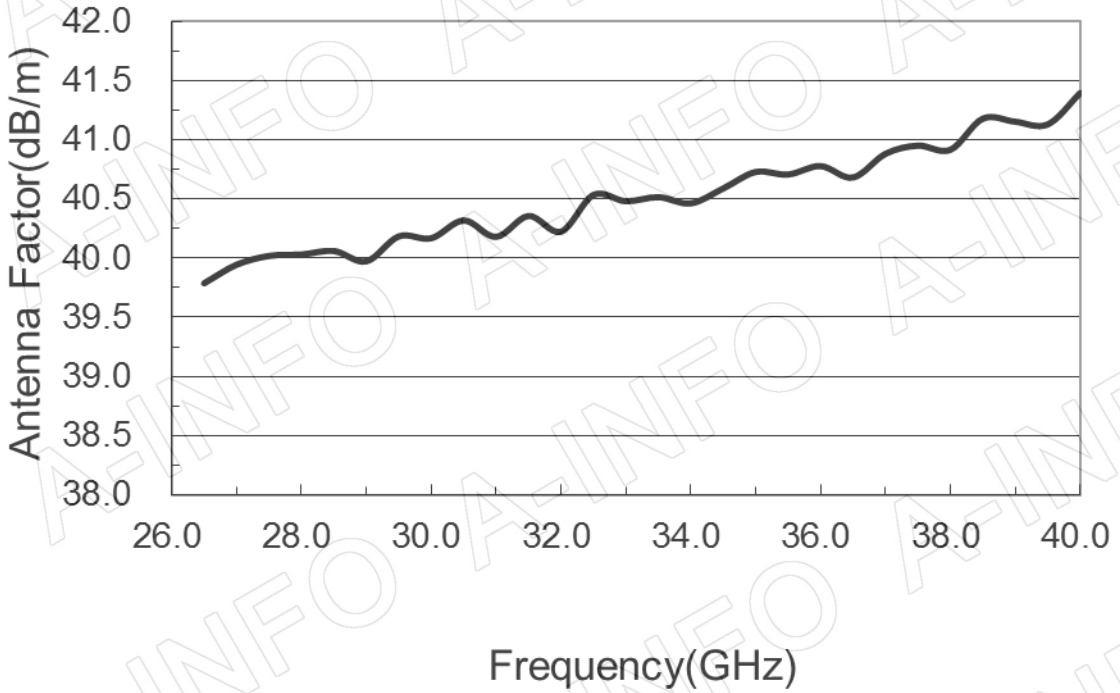

China(Beijing): Tel: (+86) 10-6266-7326, (+86) 10-6266-7327 Fax: (+86) 10-6266-7379
China(Chengdu): Tel: (+86) 28-8519-2786, (+86) 28-8519-3044 Fax: (+86) 28-8519-3068
USA : Tel: (+1) 949-639-9688, (+1) 949-639-9608 Fax: (+1) 949-639-9670
Website: www.ainfoinc.com
Email: sales@ainfoinc.com
Data subject to change without notice. For current data sheets, please contact: Sales@ainfoinc.com

Frequency (GHz)	Gain (dBi)	Antenna Factor (dB/m)
26.5	18.54	40.13
27.0	18.75	40.09
27.5	19.01	39.99
28.0	19.18	39.97
28.5	19.31	40.00
29.0	19.43	40.03
29.5	19.61	40.00
30.0	19.88	39.87
30.5	19.89	40.01
31.0	19.89	40.15
31.5	20.10	40.08
32.0	20.31	40.00
32.5	20.33	40.12
33.0	20.35	40.23

Frequency (GHz)	Gain (dBi)	Antenna Factor (dB/m)
33.5	20.47	40.24
34.0	20.59	40.25
34.5	20.60	40.37
35.0	20.60	40.49
35.5	20.81	40.40
36.0	20.92	40.42
36.5	20.94	40.52
37.0	20.95	40.62
37.5	21.12	40.57
38.0	21.18	40.63
38.5	21.21	40.71
39.0	21.23	40.80
39.5	21.36	40.78
40.0	21.50	40.75

2. Cross Polarization Isolation

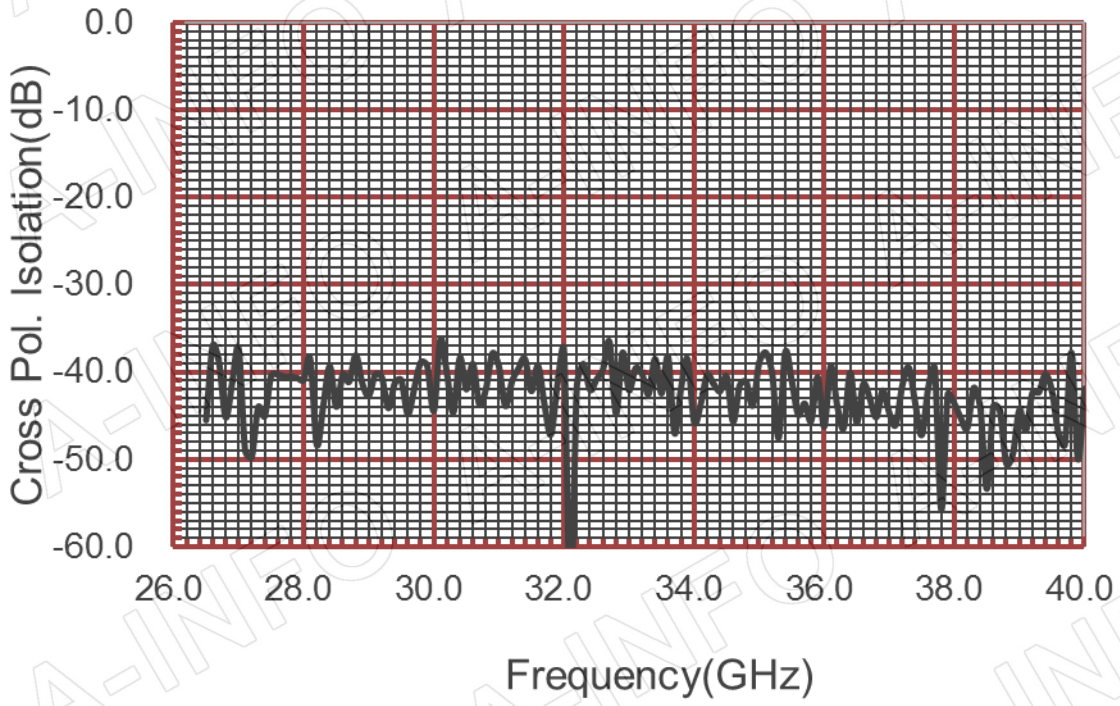

China(Beijing): Tel: (+86) 10-6266-7326, (+86) 10-6266-7327 Fax: (+86) 10-6266-7379
China(Chengdu): Tel: (+86) 28-8519-2786, (+86) 28-8519-3044 Fax: (+86) 28-8519-3068 Website: www.ainfoinc.com
USA : Tel: (+1) 949-639-9688, (+1) 949-639-9608 Fax: (+1) 949-639-9670 Email: sales@ainfoinc.com
Data subject to change without notice. For current data sheets, please contact: Sales@ainfoinc.com

3. VSWR(C Type)

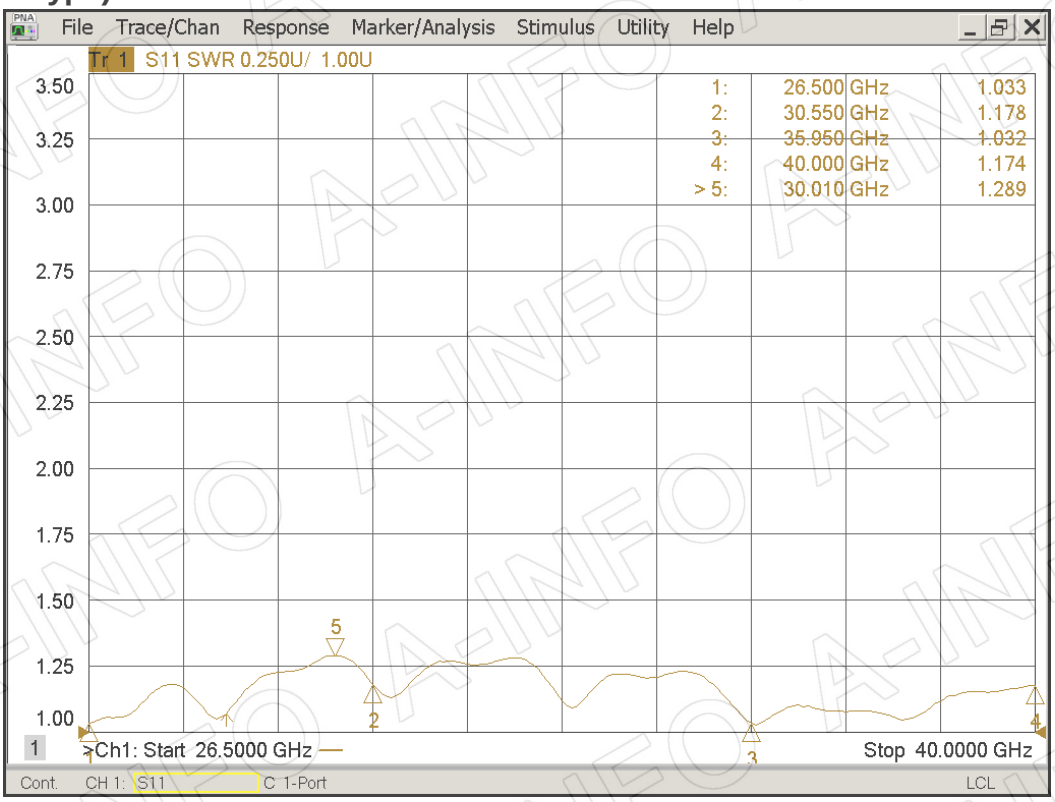

AINFO Inc.
China(Beijing): Tel: (+86) 10-6266-7326, (+86) 10-6266-7327 Fax: (+86) 10-6266-7379
China(Chengdu): Tel: (+86) 28-8519-2786, (+86) 28-8519-3044 Fax: (+86) 28-8519-3068 Website: www.ainfoinc.com
USA : Tel: (+1) 949-639-9688, (+1) 949-639-9608 Fax: (+1) 949-639-9670 Email: sales@ainfoinc.com

Data subject to change without notice. For current data sheets, please contact: Sales@ainfoinc.com

4. Pattern

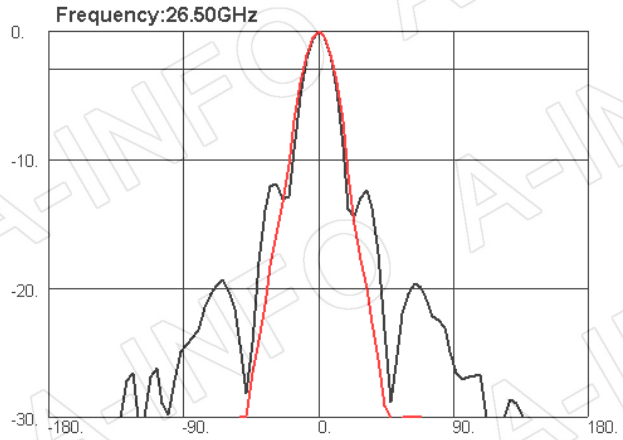

3dB Beamwidth(deg):20.20 3dB Beamwidth(deg):18.66

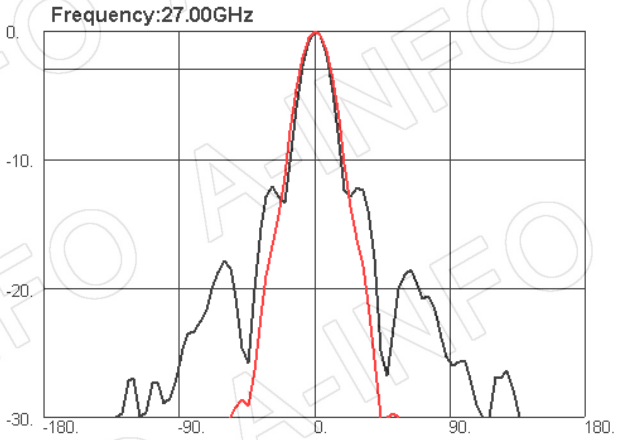

3dB Beamwidth(deg):20.21 3dB Beamwidth(deg):17.75

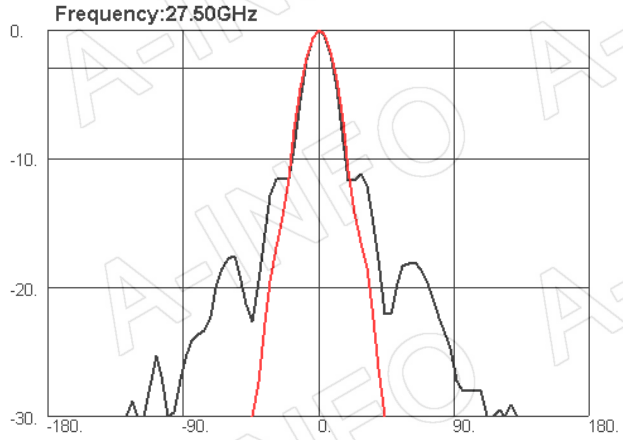

3dB Beamwidth(deg):19.75 3dB Beamwidth(deg):18.40

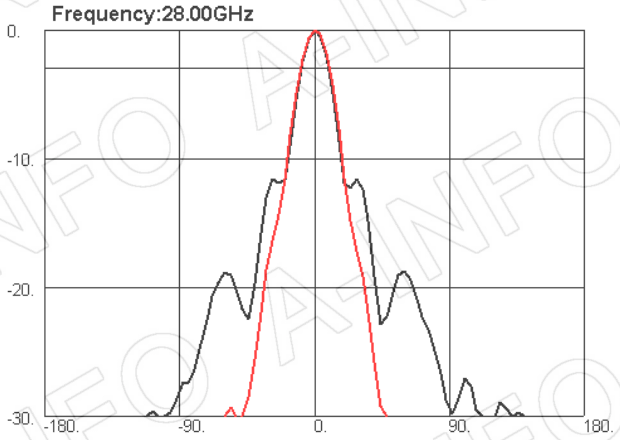

3dB Beamwidth(deg):19.05 3dB Beamwidth(deg):17.95

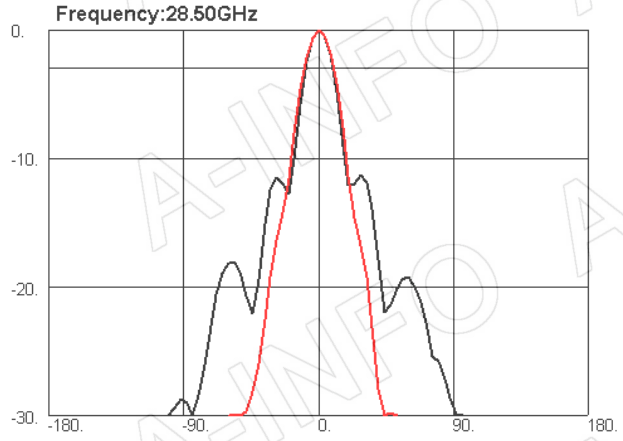

3dB Beamwidth(deg):19.43 3dB Beamwidth(deg):18.04

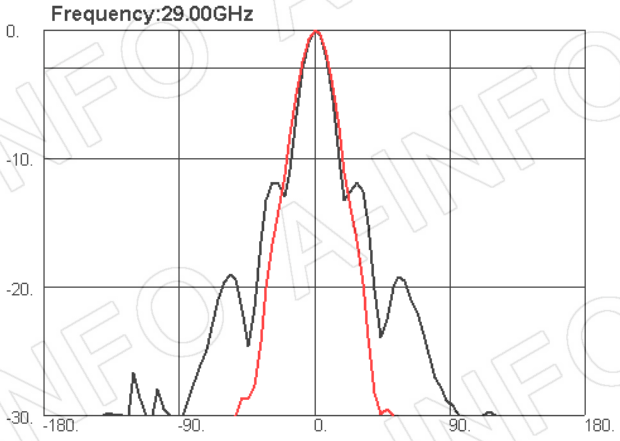

3dB Beamwidth(deg):18.56 3dB Beamwidth(deg):16.74

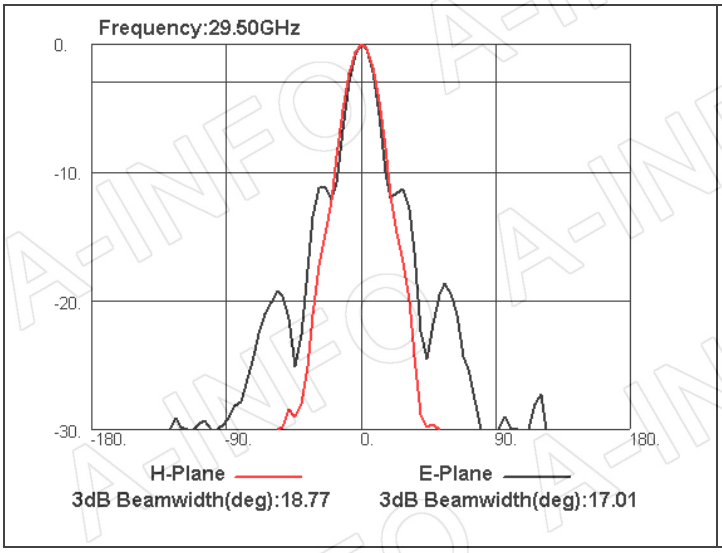

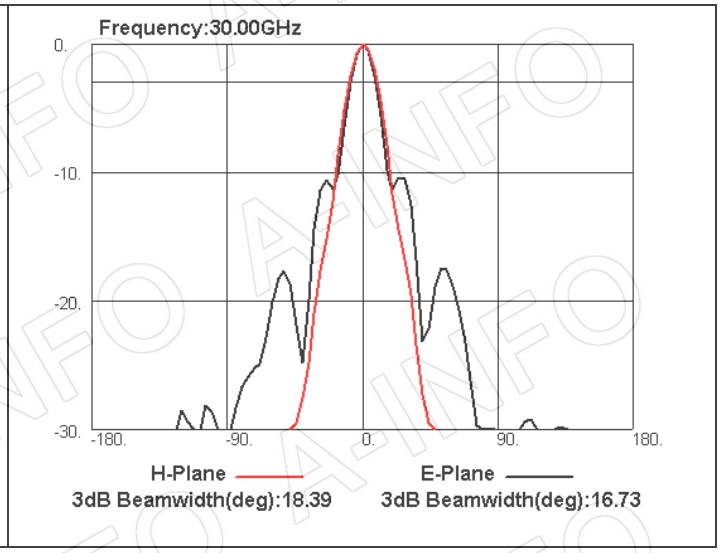

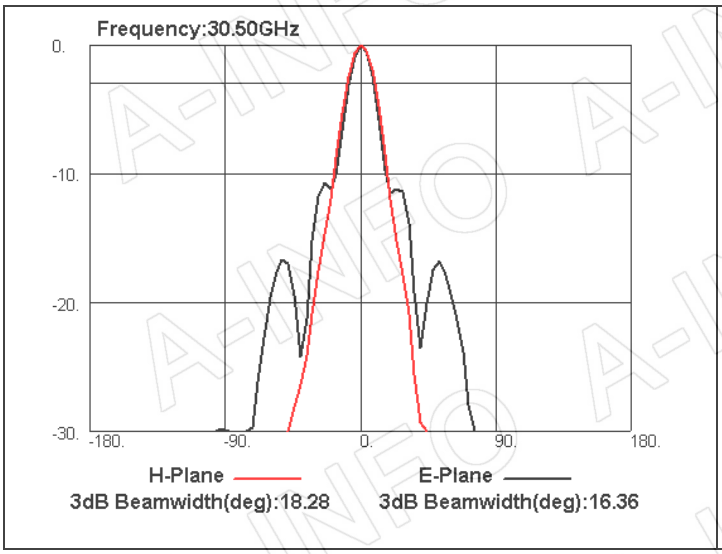

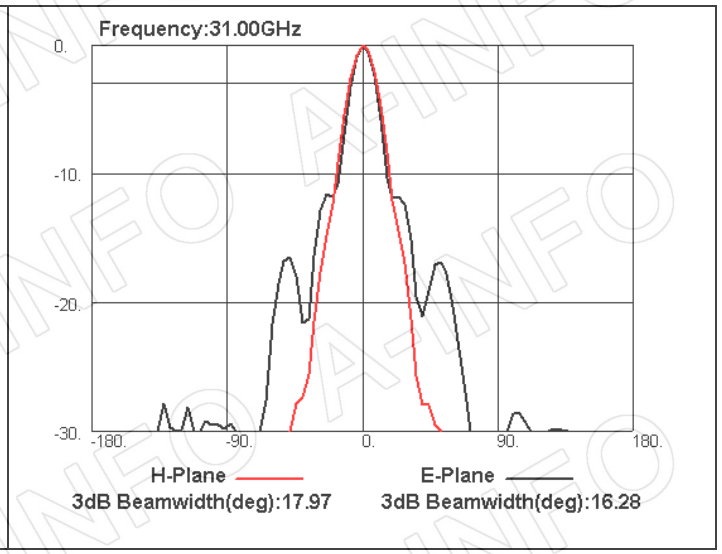

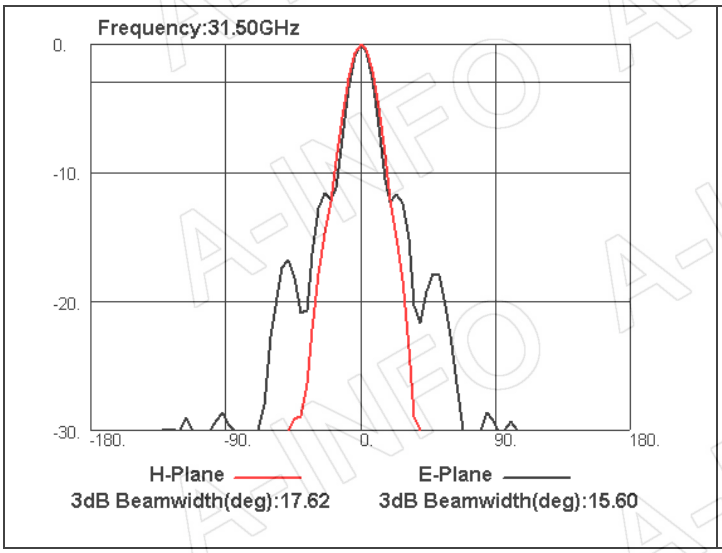

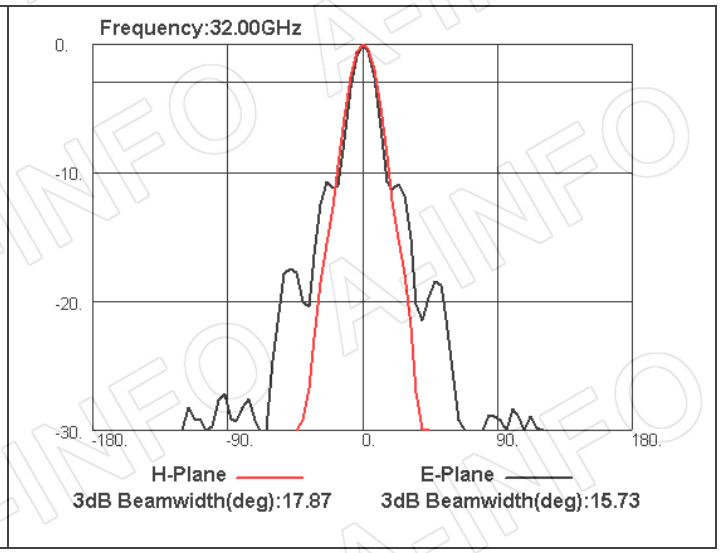

China(Beijing): Tel: (+86) 10-6266-7326, (+86) 10-6266-7327 Fax: (+86) 10-6266-7379
China(Chengdu): Tel: (+86) 28-8519-2786, (+86) 28-8519-3044 Fax: (+86) 28-8519-3068 Website: www.ainfoinc.com
USA : Tel: (+1) 949-639-9688, (+1) 949-639-9608 Fax: (+1) 949-639-9670 Email: sales@ainfoinc.com
Data subject to change without notice. For current data sheets, please contact: Sales@ainfoinc.com

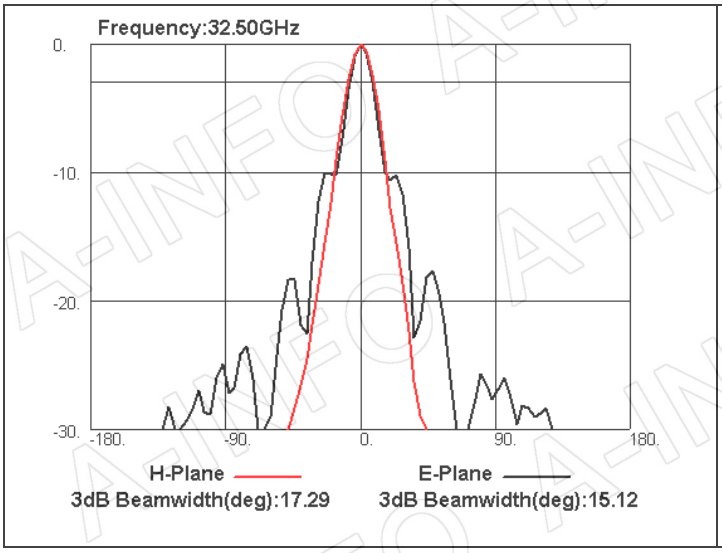

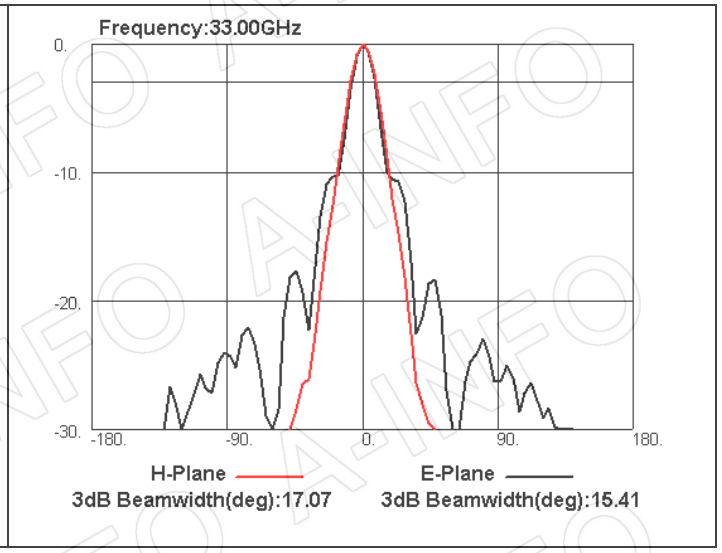

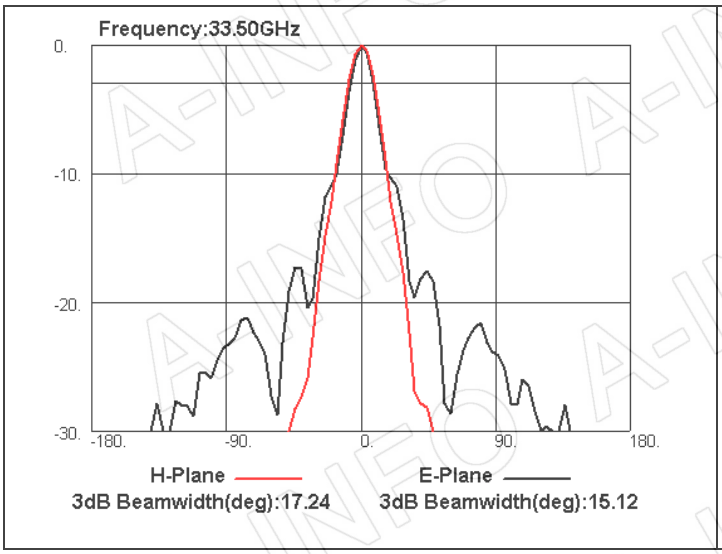

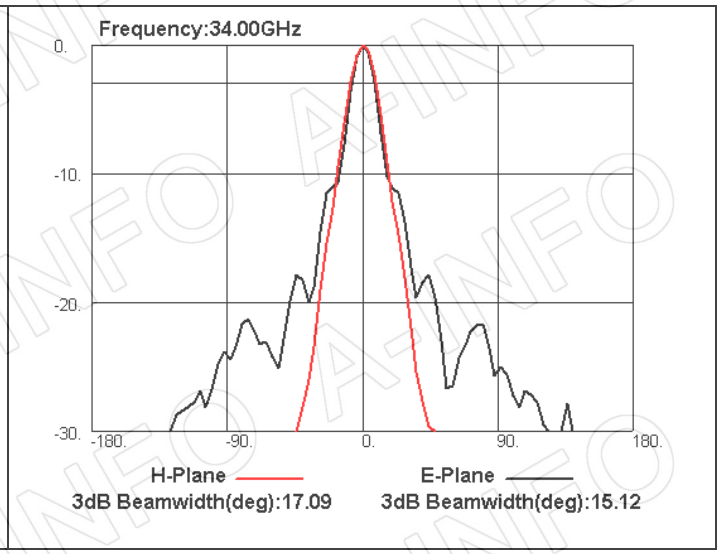

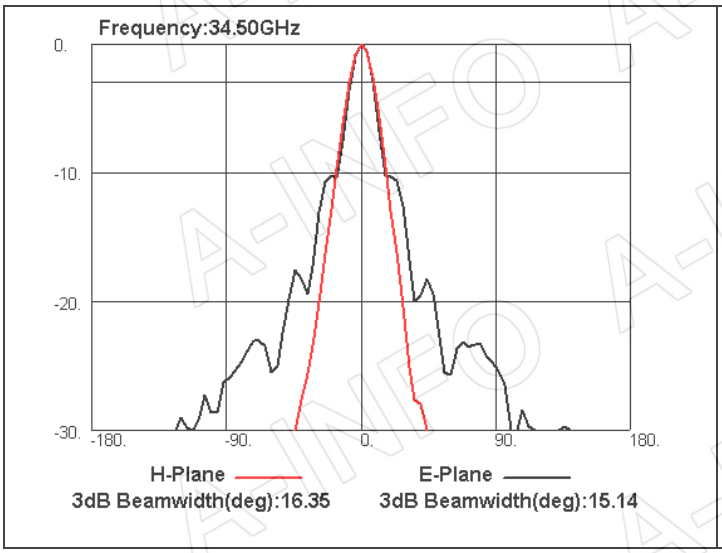

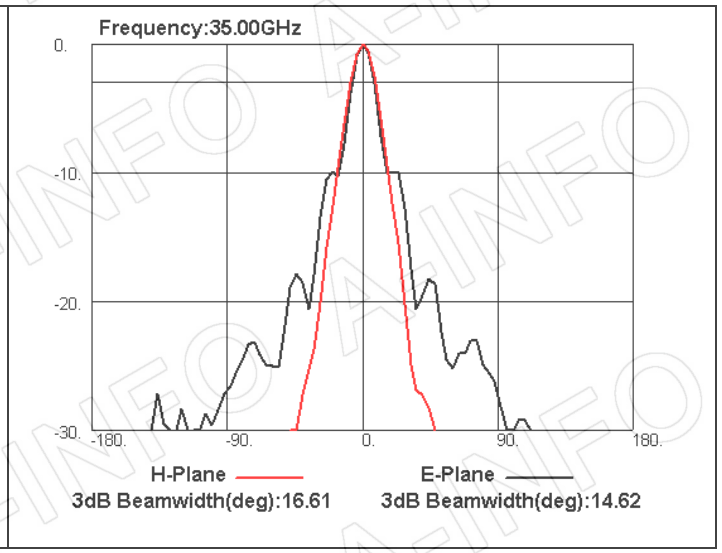

China(Beijing): Tel: (+86) 10-6266-7326, (+86) 10-6266-7327 Fax: (+86) 10-6266-7379
China(Chengdu): Tel: (+86) 28-8519-2786, (+86) 28-8519-3044 Fax: (+86) 28-8519-3068 Website: www.ainfoinc.com
USA : Tel: (+1) 949-639-9688, (+1) 949-639-9608 Fax: (+1) 949-639-9670 Email: sales@ainfoinc.com
Data subject to change without notice. For current data sheets, please contact: Sales@ainfoinc.com

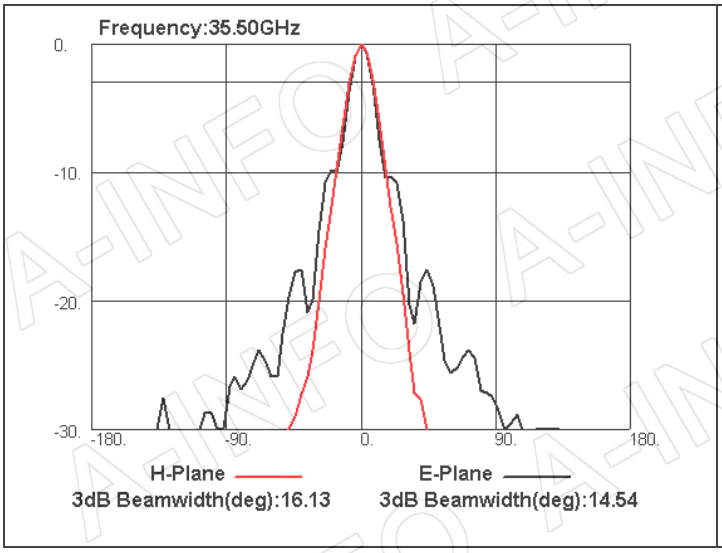

3dB Beamwidth(deg):16.13 3dB Beamwidth(deg):14.54

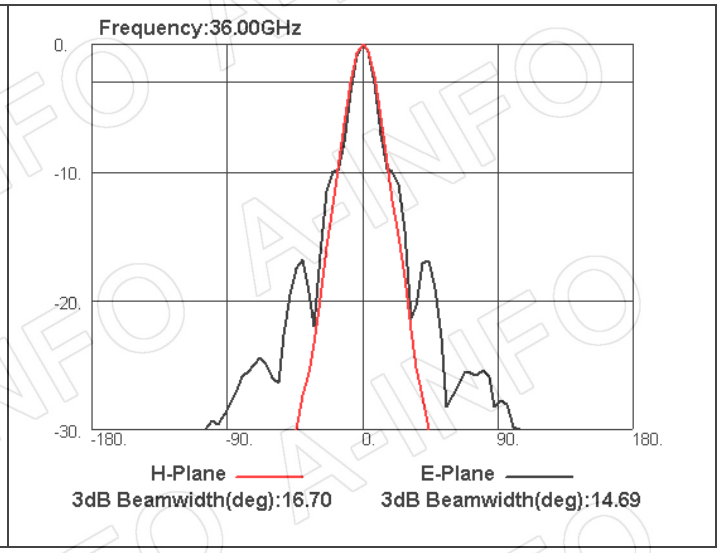

3dB Beamwidth(deg):16.70 3dB Beamwidth(deg):14.69

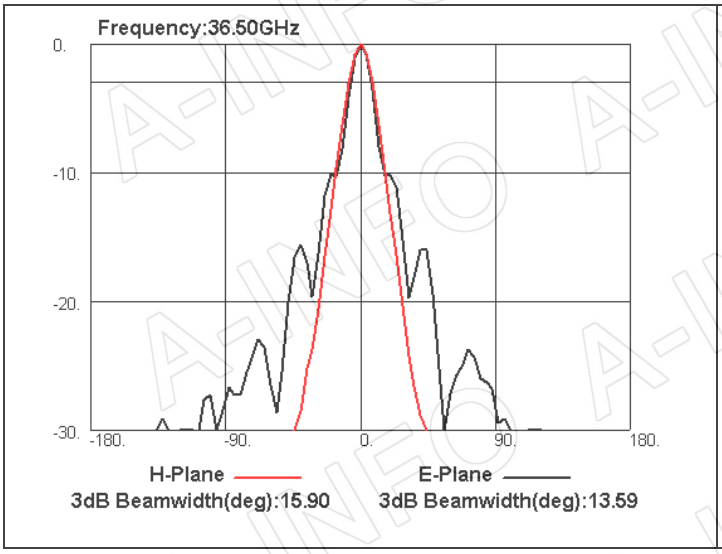

3dB Beamwidth(deg):15.90 3dB Beamwidth(deg):13.59

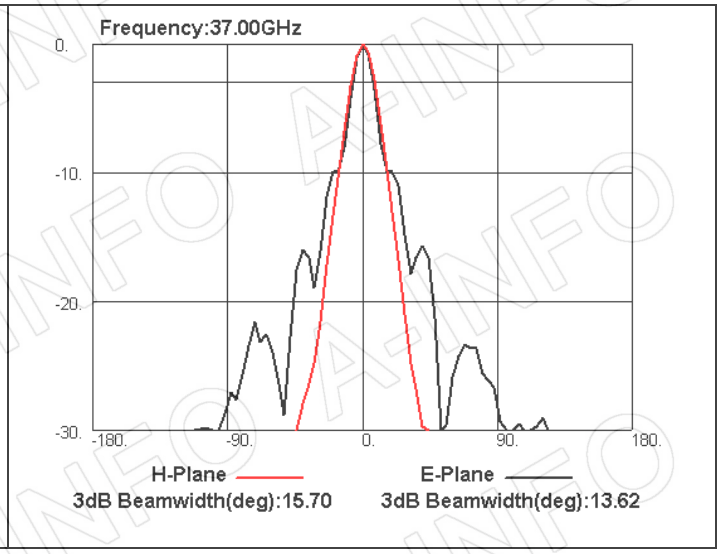

3dB Beamwidth(deg):15.70 3dB Beamwidth(deg):13.62

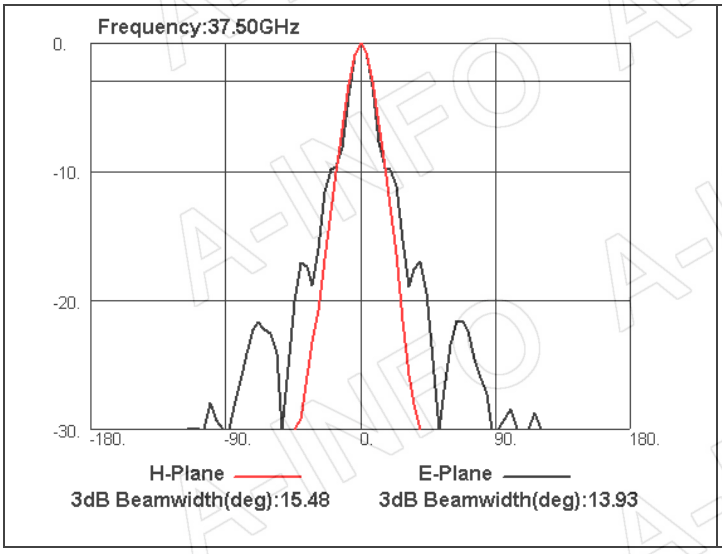

3dB Beamwidth(deg):15.48 3dB Beamwidth(deg):13.93

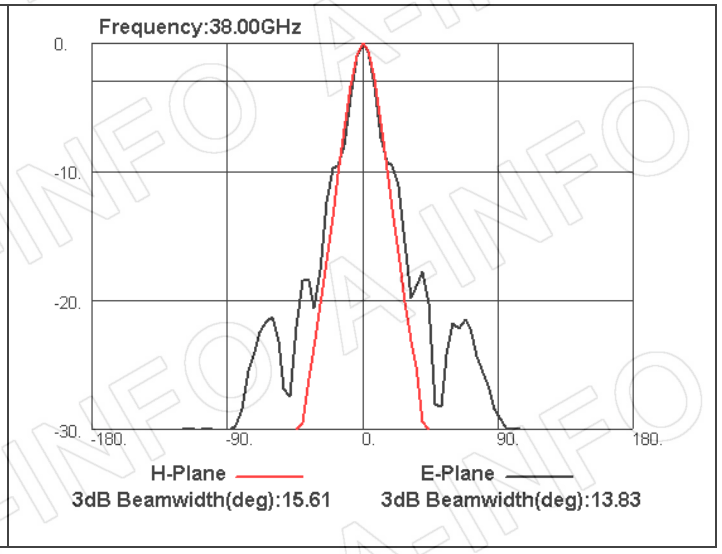

3dB Beamwidth(deg):15.61 3dB Beamwidth(deg):13.83

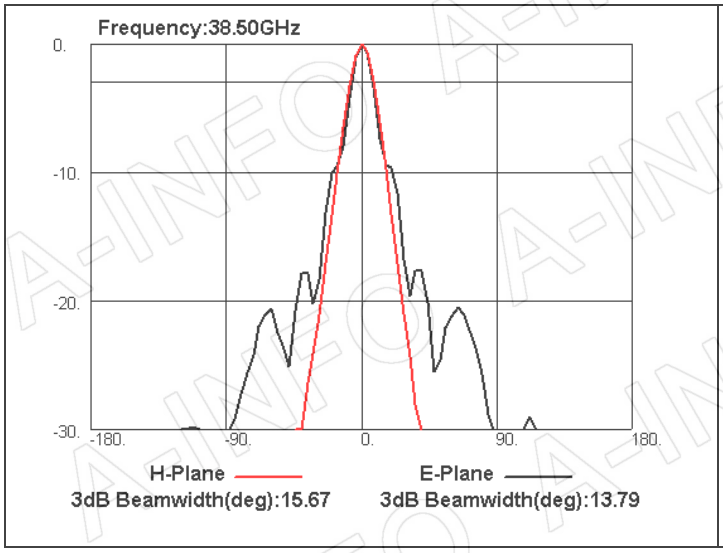

3dB Beamwidth(deg):15.67 3dB Beamwidth(deg):13.79

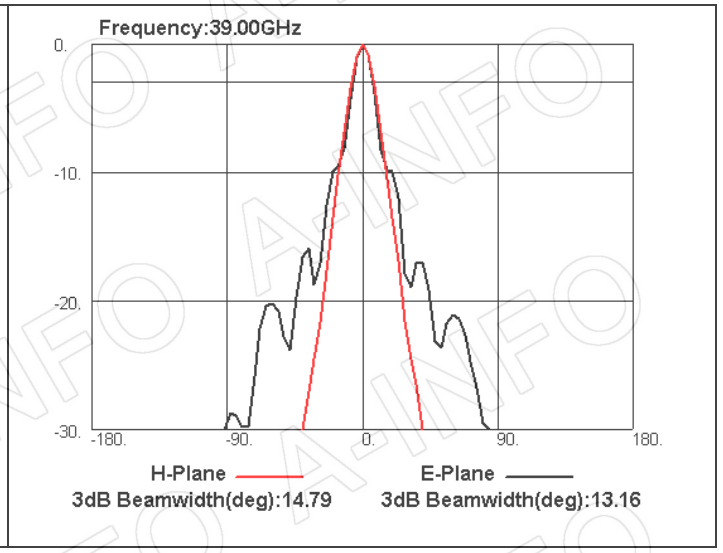

3dB Beamwidth(deg):14.79 3dB Beamwidth(deg):13.16

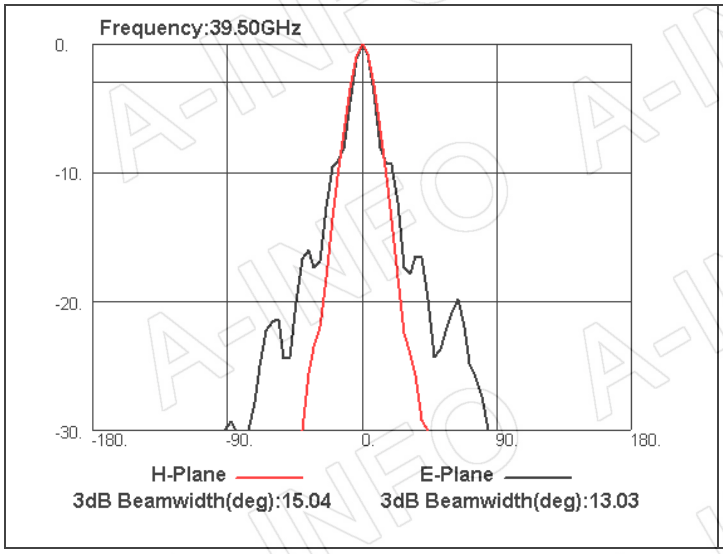

3dB Beamwidth(deg):15.04 3dB Beamwidth(deg):13.03

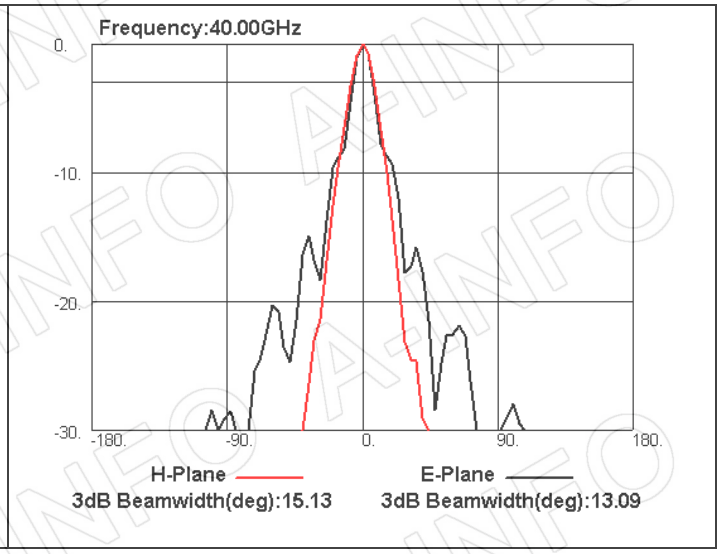

3dB Beamwidth(deg):15.13 3dB Beamwidth(deg):13.09

AINFO Inc.
China(Beijing): Tel: (+86) 10-6266-7326, (+86) 10-6266-7327 Fax: (+86) 10-6266-7379
China(Chengdu): Tel: (+86) 28-8519-2786, (+86) 28-8519-3044 Fax: (+86) 28-8519-3068 Website: www.ainfoinc.com
USA : Tel: (+1) 949-639-9688, (+1) 949-639-9608 Fax: (+1) 949-639-9670 Email: sales@ainfoinc.com

Data subject to change without notice. For current data sheets, please contact: Sales@ainfoinc.com